A-1 3 3 **PERSPECTIVE**
N T S

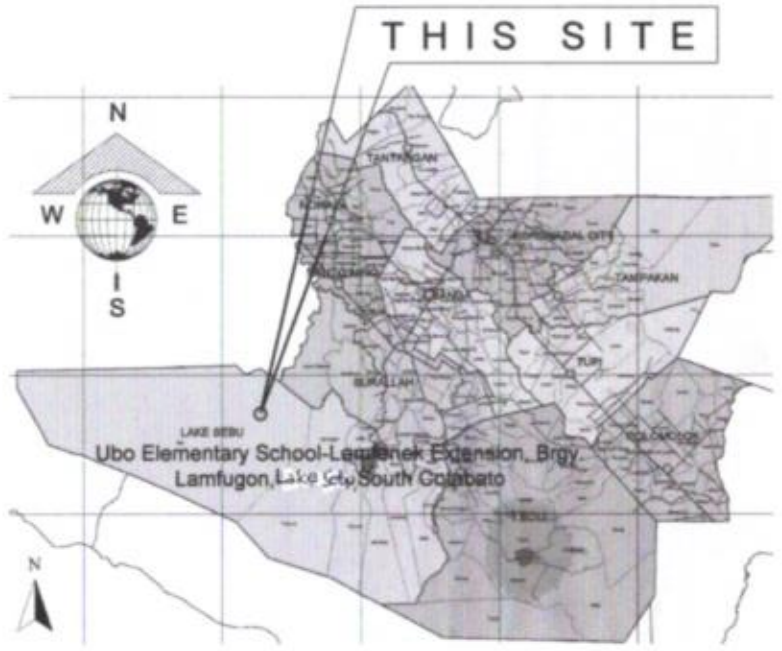

A-1 2 3 **VICINITY MAP**
N T S

A-1 3 3 **SITE DEVELOPMENT PLAN**
N T S

PROVINCIAL ADMINISTRATOR'S OFFICE
RECEIVED
BY: PLAIZA MAE S. HIFARVA, LPT
Administrative Aide V
DATE: AUG 14 2019
TIME:

TABLE OF CONTENTS

2 - CLASSROOM
SCHOOL BUILDING

PLUMBING

P-1 WATER LINE LAY-OUT
WATER LINE ISOMETRIC LAY-OUT

P-2 WASTE WATER LINE LAY-OUT
WASTE WATER LINE ISOMETRIC LAY-OUT

P-3 SOLID WASTE LINE LAY-OUT
SOLID WASTE LINE ISOMETRIC LAY-OUT

P-4 SEPTIC VAULT DETAIL
PEDESTAL LAVATORY DETAIL
WATER CLOSET DETAIL
GENERAL NOTES
SPECIFICATION
LEGEND

ELECTRICAL

E-1 ELECTRICAL LIGHTING-LAY OUT

E-2 CONVENIENCE OUTLET LAY-OUT

E-3 CONDUIT LAY-OUT

E-4 ELECTRICAL RISER DIAGRAM
LOAD SCHEDULE
NOTES & SPECIFICATIONS
LOCATION MAP

ARCHITECTURAL

A-1 PERSPECTIVE VIEW
VICINITY MAP
LOCATION
TABLE OF CONTENTS

A-2 PROPOSED FLOOR PLAN

A-3 FRONT ELEVATION
REAR SIDE ELEVATION

A-4 SECTION THRU "B"
RIGHT SIDE ELEVATION
LEFT SIDE ELEVATION

A-5 SECTION THRU "A"
BLACK BOARD DETAIL
SCHEDULE OF WINDOWS

A-6 SCHEDULE OF DOORS
DOOR SECTIONAL ELEVATION
WOOD FLUSH DOOR DETAIL
DOORS SPOT DETAILED - PLAN THRU 'A'
LOUVER BLOCKS DETAIL
TYP. CEILING VENT DET.

A-7 REFLECTED CEILING PLAN
CEILING DETAIL
CEILING JOIST BLOW UP-SECTIONAL ELEVATION

STRUCTURAL

S-1 FOUNDATION PLAN

S-2 CF DETAIL
WALL (1) FOOTING (1) DETAIL
WALL (2) FOOTING (1) DETAIL
WALL (3) FOOTING (1) DETAIL
RAMP PLAN
RAMP SPOT DETAIL
RAMP AND HAND RAIL DETAIL
TYPICAL BEAM DETAIL

S-3 ROOF FRAMING PLAN

S-4 ROOF FRAMING PLAN

S-5 TIE ROD CONNECTION DET.
SAG ROD CONNECTION DET.
PURLINS CONNECTION DET.
TYPICAL ANCHORAGE DET.
DETAIL OF PURLINS
DETAIL OF RAFTER
SECTION DETAILS
SIDE FLASHING DETAIL
BLIND GUTTER DETAIL
EAVES DETAIL

REPUBLIC OF THE PH.
DEPARTMENT OF PUBLIC WORKS
OFFICE OF THE BUILDING OFFICIAL

LINE AND GRADE

LAND USE AND ZONING

STRUCTURAL

ARCHITECTURAL

SANITARY

ELECTRICAL

MECHANICAL

REPUBLIC OF THE PHILIPPINES PROVINCE OF SOUTH COTABATO OFFICE OF THE PROVINCIAL ENGINEER PLANNING, PROGRAMMING & DESIGNING DIVISION KORONADAL CITY	PROJECT TITLE & LOCATION: CONSTRUCTION OF TWO (2) CLASSROOM BUILDING WITH ATTACHED TOILET Ubo Elementary School-Lamfunok Extension, Brgy. Lamfugon, Lake Sebu, South Cotabato	SURVEYED BY: RUSSEL F. BIGCAS ENGINEER II DRAFTED BY: JHICOR C. FANHGON, UAP ARCHITECT (J.O.)	PREPARED BY: CARL FRANCIS I. GARCIA, UAP ARCHITECT II CHECKED BY: GLENDALE B. MARFIL, UAP ARCHITECT III - VERTICAL SECTION HEAD	SUBMITTED BY: FREDERICK D. SORIANO, MPA HEAD, Planning, Prog'g & Designing Division	RECOMMENDING APPROVAL: MARNILO S. APEROCHO, MPA PROVINCIAL ENGINEER	APPROVED: REYNALDO S. TAMAYO, JR. PROVINCIAL GOVERNOR	SHEET NO. A 1 1 22

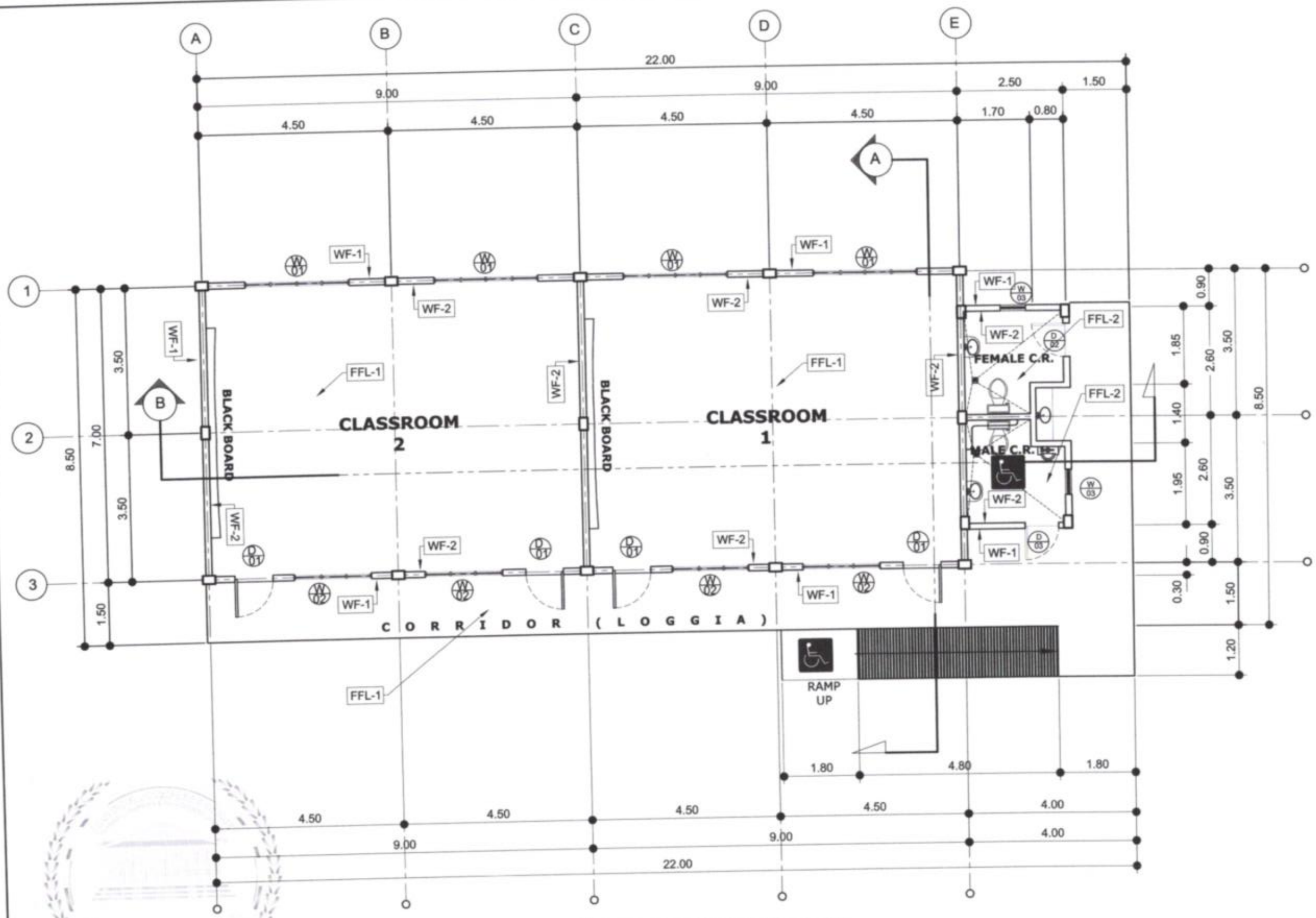

MARK	DESCRIPTION
WF-1	100mm thick CHB WITH FAIR FACED SMOOTH PLASTERED FINISH WITH PRIMER PAINTED FINISH WALLING COLOR : N/A
WF-2	100mm thick CHB WITH FAIR FACED SMOOTH PLASTERED FINISH WITH PRIMER PAINTED FINISH WALLING COLOR : N/A
FF-1	100mm THK. SLAB WITH FAIR FACED SMOOTH PLASTERED FINISH TILE : N/A
FF-2	100mm THK. SLAB WITH ROUGH PLASTERED FINISH TILE : 0.30m x 0.60m RUSTIC SERIES UNGLAZED CERAMIC FLOOR TILES
W1	JALOUSIE WINDOW w/ CLEAR GLASS BLADES ON SID ALUM. HOUSING ON 50 x 150mm WOOD JAMBS/FRAMES
W2	JALOUSIE WINDOW w/ CLEAR GLASS BLADES ON SID ALUM. HOUSING ON 50 x 150mm WOOD JAMBS/FRAMES
W3	JALOUSIE WINDOW w/ CLEAR GLASS BLADES ON SID ALUM.HOUSING ON 50 x 150mm WOOD JAMBS/FRAMES
D1	Wooden Panel Door w/ WOODEN AND JAMB WITH LEVER TYPE DOOR KNOB
D2	PVC DOOR w/ LOUVERED VENT AND LEVER TYPE DOOR KNOB NOTE: PROVIDE & APPLY NON-SAG EPOXY AS ADHESIVE ON DOOR HINGES PRIOR UPON SCREW FASTENING ON DOOR JAMB
D3	PVC DOOR w/ LOUVERED VENT AND LEVER TYPE DOOR KNOB NOTE: PROVIDE & APPLY NON-SAG EPOXY AS ADHESIVE ON DOOR HINGES PRIOR UPON SCREW FASTENING ON DOOR JAMB

NOTE

ALL ARCHITECTURAL PLANS SHALL PREVAIL OVER ALL ENGINEERING PLANS WITH REGARDS TO DIMENSIONS, ANY DESCRIPANCIES FOUND HEREIN SHALL BE VERIFIED WITH THE ARCHITECT.

A-2 / 1 1

PROPOSED FLOOR PLAN

SCALE: 1:100 MTS

REPUBLIC OF THE PHILIPPINES PROVINCE OF SOUTH COTABATO OFFICE OF THE PROVINCIAL ENGINEER PLANNING, PROGRAMMING & DESIGNING DIVISION KORONADAL CITY	PROJECT TITLE & LOCATION: CONSTRUCTION OF TWO (2) CLASSROOM BUILDING WITH ATTACHED TOILET Ubo Elementary School-Lamfenek Extension, Brgy. Lamfugon, Lake Sebu, South Cotabato	DRAFTED BY: JHICOR L. FANUGON, UAP ARCHITECT (J.O.)	PREPARED BY: CARL FRANCIS T. GARCIA, UAP ARCHITECT II	CHECKED BY: GLENDALE B. MARFIL, UAP ARCHITECT III - VERTICAL SECTION HEAD	SUBMITTED BY: FREDERICK D. SORIANO,MPA HEAD, Planning, Prog'g & Designing Division	RECOMMENDING APPROVAL: MARNILO B. APEROCHO, MPA PROVINCIAL ENGINEER	APPROVED: REYNALDO S. TAMAYO, JR. PROVINCIAL GOVERNOR	SHEET NO: A 2 2 22

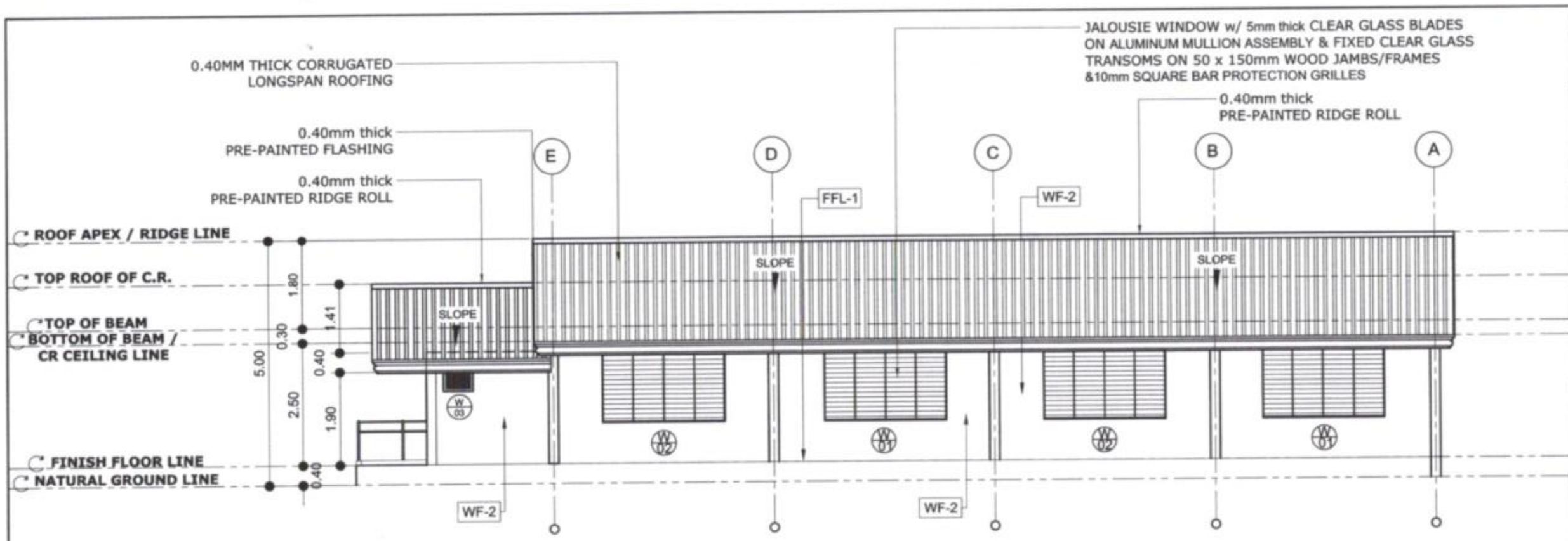

A-3 2 2 **REAR ELEVATION**
SCALE: 1:100 MTS

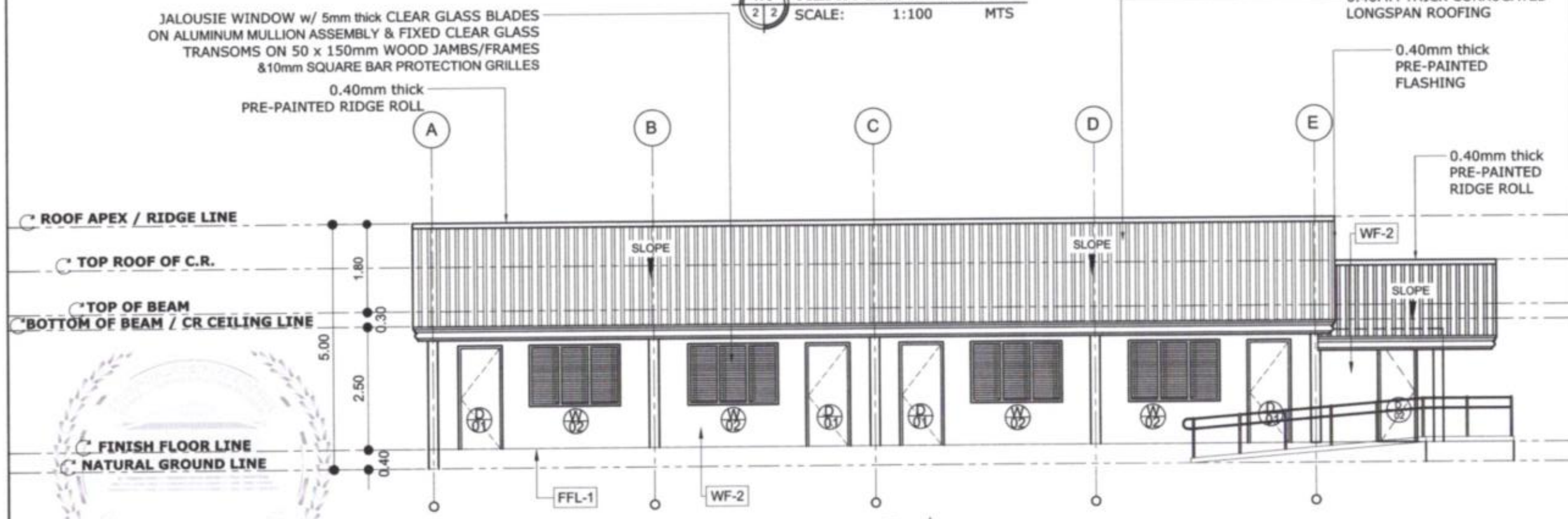

A-3 1 2 **FRONT ELEVATION**
SCALE: 1:100 MTS

MARK	DESCRIPTION
WF-1	100mm thick CHB WITH FAIR FACED SMOOTH PLASTERED FINISH WITH PRIMER PAINTED FINISH WALLING COLOR : N/A
WF-2	100mm thick CHB WITH FAIR FACED SMOOTH PLASTERED FINISH WITH PRIMER PAINTED FINISH WALLING COLOR : N/A
FF-1	100mm THK. SLAB WITH FAIR FACED SMOOTH PLASTERED FINISH TILE : N/A
FF-2	100mm THK. SLAB WITH ROUGH PLASTERED FINISH TILE : 0.30m x 0.60m RUSTIC SERIES UNGLAZED CERAMIC FLOOR TILES
W1	JALOUSIE WINDOW w/ CLEAR GLASS BLADES ON SID ALUM. HOUSING ON 50 x 150mm WOOD JAMBS/FRAMES
W2	JALOUSIE WINDOW w/ CLEAR GLASS BLADES ON SID ALUM. HOUSING ON 50 x 150mm WOOD JAMBS/FRAMES
W3	JALOUSIE WINDOW w/ CLEAR GLASS BLADES ON SID ALUM.HOUSING ON 50 x 150mm WOOD JAMBS/FRAMES
D1	Wooden Panel Door w/ WOODEN AND JAMB WITH LEVER TYPE DOOR KNOB
D2	PVC DOOR w/ LOUVERED VENT AND LEVER TYPE DOOR KNOB NOTE: PROVIDE & APPLY NON-SAG EPOXY AS ADHESIVE ON DOOR HINGES PRIOR UPON SCREW FASTENING ON DOOR JAMB
D3	PVC DOOR w/ LOUVERED VENT AND LEVER TYPE DOOR KNOB NOTE: PROVIDE & APPLY NON-SAG EPOXY AS ADHESIVE ON DOOR HINGES PRIOR UPON SCREW FASTENING ON DOOR JAMB

NOTE

ALL ARCHITECTURAL PLANS SHALL PREVAIL OVER ALL ENGINEERING PLANS WITH REGARDS TO DIMENSIONS, ANY DESCRIPANCIES FOUND HEREIN SHALL BE VERIFIED WITH THE ARCHITECT.

REPUBLIC OF THE PHILIPPINES PROVINCE OF SOUTH COTABATO OFFICE OF THE PROVINCIAL ENGINEER PLANNING, PROGRAMMING & DESIGNING DIVISION KORONADAL CITY	PROJECT TITLE & LOCATION:	DRAFTED BY:	PREPARED BY:	CHECKED BY:	SUBMITTED BY:	RECOMMENDING APPROVAL:	APPROVED:	SHEET NO
	CONSTRUCTION OF TWO (2) CLASSROOM BUILDING WITH ATTACHED TOILET Ubo Elementary School-Lamfenek Extension, Brgy. Lamfugon, Lake Sebu, South Cotabato	JHICOR L. FANUGON, UAP ARCHITECT (J.O.)	CARL FRANCIS I. GARCIA, UAP ARCHITECT II	GLENDALE B. MARFIL, UAP ARCHITECT III - VERTICAL SECTION HEAD	FREDERICK G. SORIANO,MPA HEAD, Planning, Prog'g & Designing Division	MARNILO S. APEROCHO, MPA PROVINCIAL ENGINEER	REYNALDO S. TAMAYO, JR. PROVINCIAL GOVERNOR	A 3 / 3 22

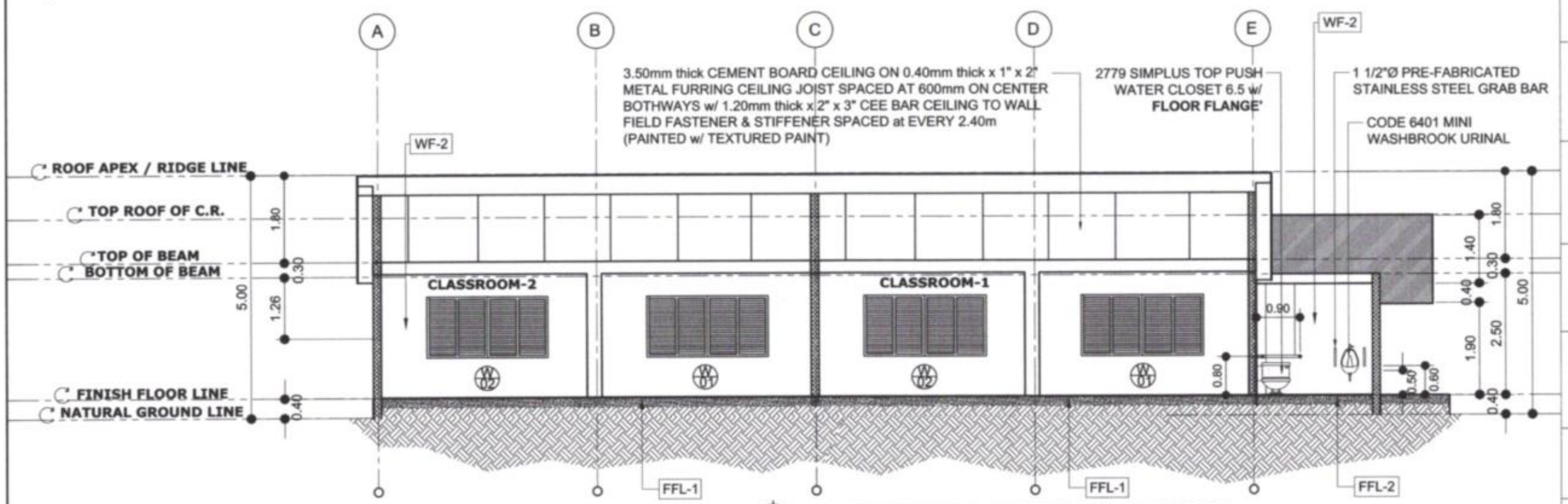

A-4 3 3 **LONGITUDINAL SECTIONAL THRU 'B'**
SCALE: 1:100 MTS

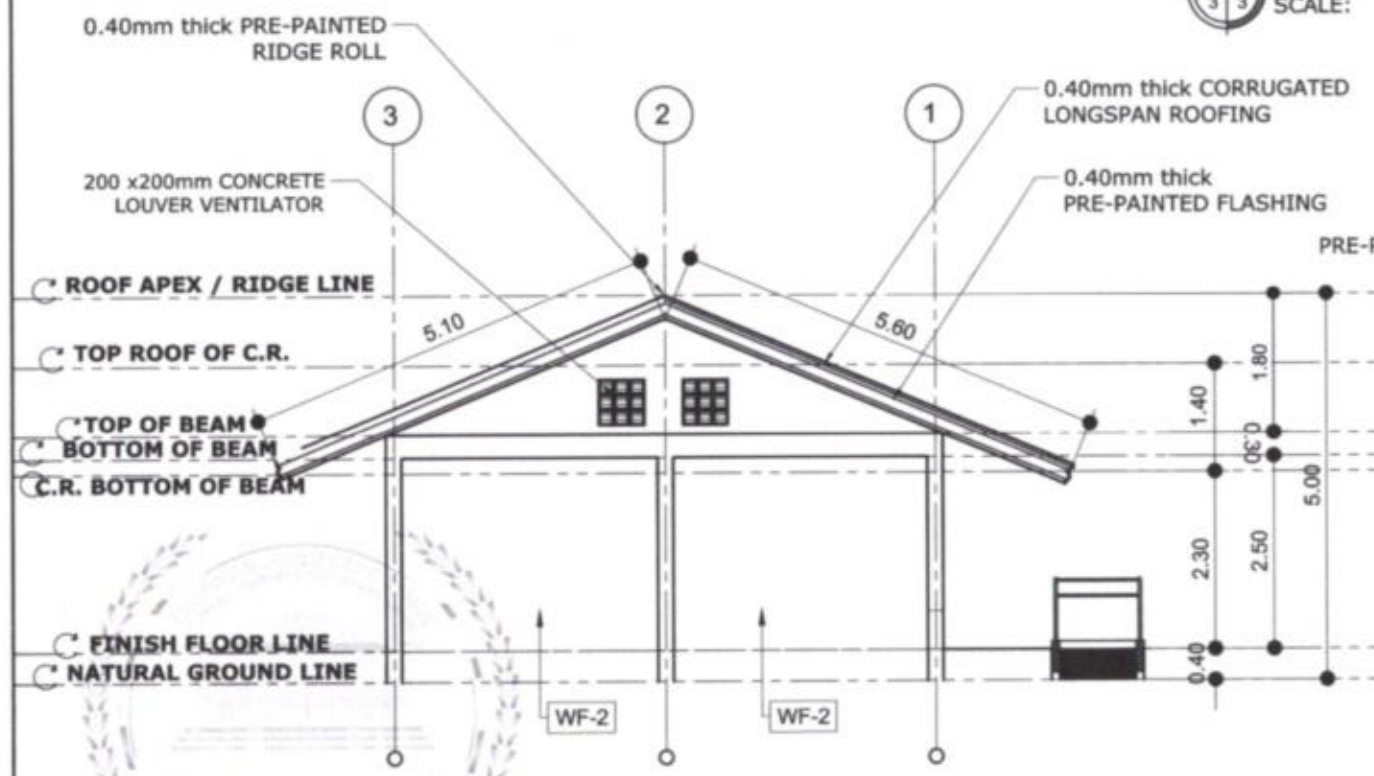

A-4 4 3 **LEFT-SIDE ELEVATION**
SCALE: 1:100 MTS

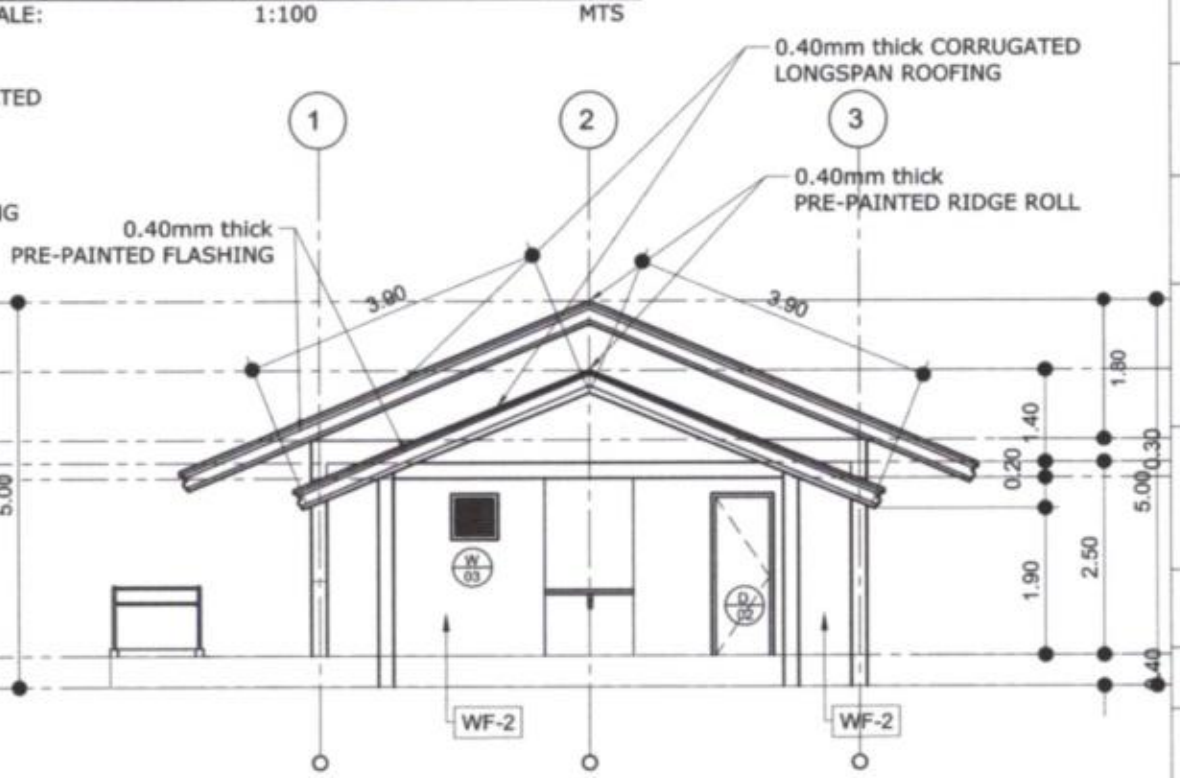

A-4 2 3 **RIGHT-SIDE ELEVATION**
SCALE: 1:100 MTS

MARK	DESCRIPTION
WF-1	100mm thick CHB WITH FAIR FACED SMOOTH PLASTERED FINISH WITH PRIMER PAINTED FINISH WALLING COLOR : N/A
WF-2	100mm thick CHB WITH FAIR FACED SMOOTH PLASTERED FINISH WITH PRIMER PAINTED FINISH WALLING COLOR : N/A
FF-1	100mm THK. SLAB WITH FAIR FACED SMOOTH PLASTERED FINISH TILE : N/A
FF-2	100mm THK. SLAB WITH ROUGH PLASTERED FINISH TILE : 0.30m x 0.60m RUSTIC SERIES UNGLAZED CERAMIC FLOOR TILES
W1	JALOUSIE WINDOW w/ CLEAR GLASS BLADES ON SID ALUM. HOUSING ON 50 x 150mm WOOD JAMBS/FRAMES
W2	JALOUSIE WINDOW w/ CLEAR GLASS BLADES ON SID ALUM. HOUSING ON 50 x 150mm WOOD JAMBS/FRAMES
W3	JALOUSIE WINDOW w/ CLEAR GLASS BLADES ON SID ALUM.HOUSING ON 50 x 150mm WOOD JAMBS/FRAMES
D1	Wooden Panel Door w/ WOODEN AND JAMB WITH LEVER TYPE DOOR KNOB
D2	PVC DOOR w/ LOUVERED VENT AND LEVER TYPE DOOR KNOB NOTE: PROVIDE & APPLY NON-SAG EPOXY AS ADHESIVE ON DOOR HINGES PRIOR UPON SCREW FASTENING ON DOOR JAMB
D3	PVC DOOR w/ LOUVERED VENT AND LEVER TYPE DOOR KNOB NOTE: PROVIDE & APPLY NON-SAG EPOXY AS ADHESIVE ON DOOR HINGES PRIOR UPON SCREW FASTENING ON DOOR JAMB

NOTE

ALL ARCHITECTURAL PLANS SHALL PREVAIL OVER ALL ENGINEERING PLANS WITH REGARDS TO DIMENSIONS, ANY DESCRIPANCIES FOUND HEREIN SHALL BE VERIFIED WITH THE ARCHITECT.

REPUBLIC OF THE PHILIPPINES PROVINCE OF SOUTH COTABATO OFFICE OF THE PROVINCIAL ENGINEER PLANNING, PROGRAMMING & DESIGNING DIVISION KORONADAL CITY	PROJECT TITLE & LOCATION:	DRAFTED BY:	PREPARED BY:	CHECKED BY:	SUBMITTED BY:	RECOMMENDING APPROVAL:	APPROVED:	SHEET NO:
	CONSTRUCTION OF TWO (2) CLASSROOM BUILDING WITH ATTACHED TOILET Ubo Elementary School-Lamfenek Extension, Brgy. Lamfugon, Lake Sebu, South Cotabato	JHIGOR L. FANUGON, UAP ARCHITECT (J.O.)	CARL FRANCIS I. GARCIA, UAP ARCHITECT II	GLENDALE B. MARFIL, UAP ARCHITECT III - VERTICAL SECTION HEAD	FREDERICK D. SORIANO,MPA HEAD, Planning, Prog'g & Designing Division	MARNILO S. APEROCHO, MPA PROVINCIAL ENGINEER	REYNALDO S. TAMAYO, JR. PROVINCIAL GOVERNOR	A 4 4 22

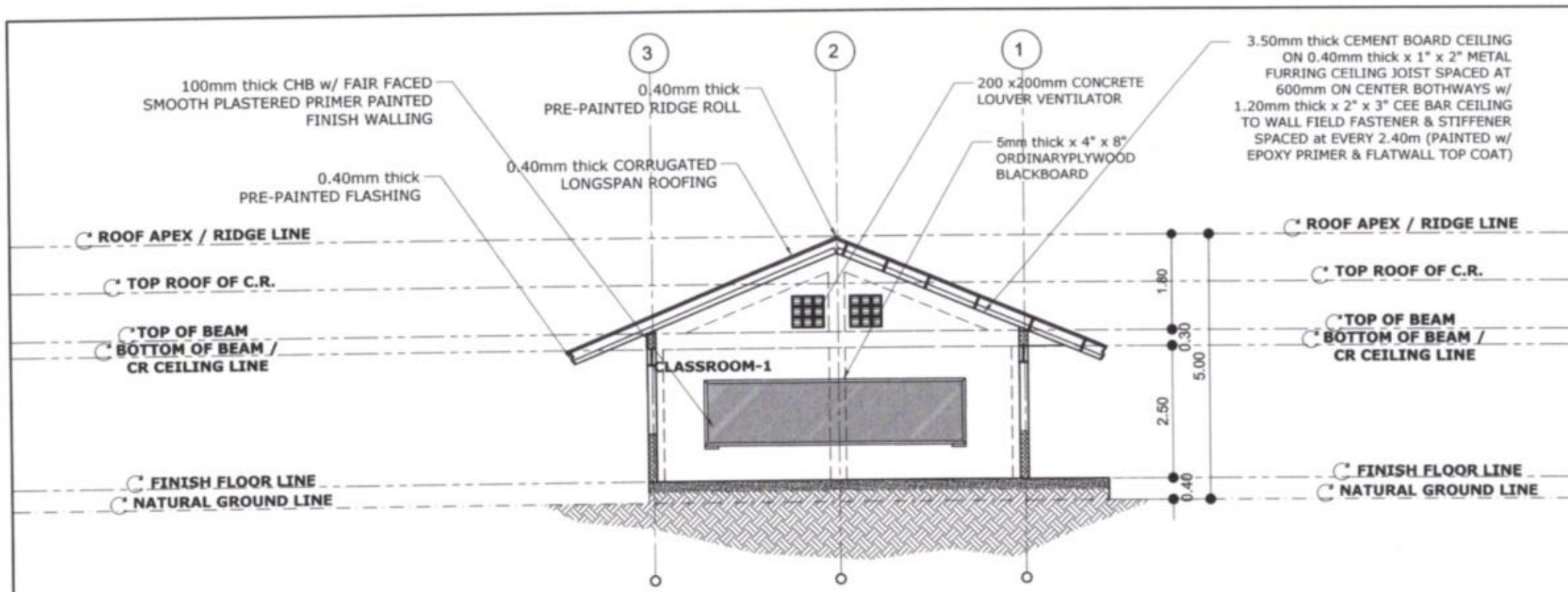

CROSS SECTIONAL THRU 'A'

A-5 | 2 3 SCALE: 1:100 MTS

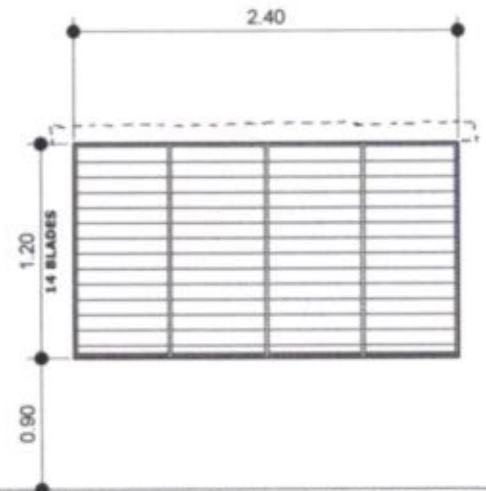

W1

DESCRIPTION: JALOUSIE WINDOW w/ CLEAR GLASS BLADES ON SID ALUM. HOUSING ON 50 x 150mm WOOD JAMBS/FRAMES

LOCATION: Class Room Rear Section

UNIT: 4

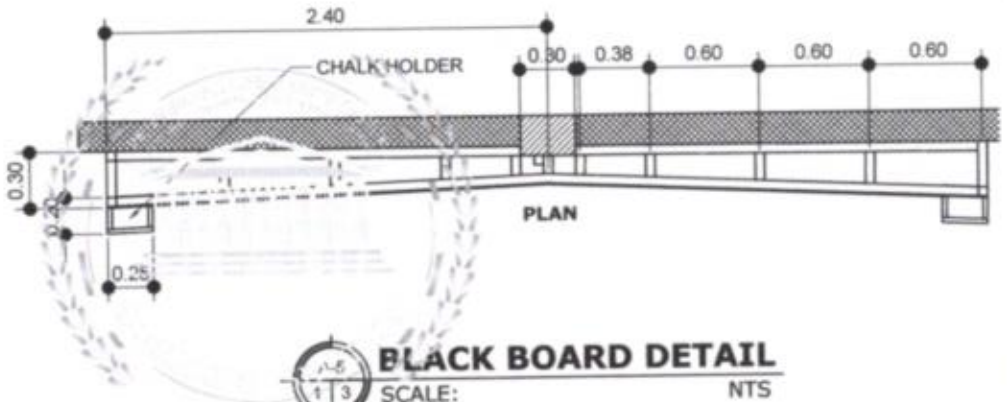

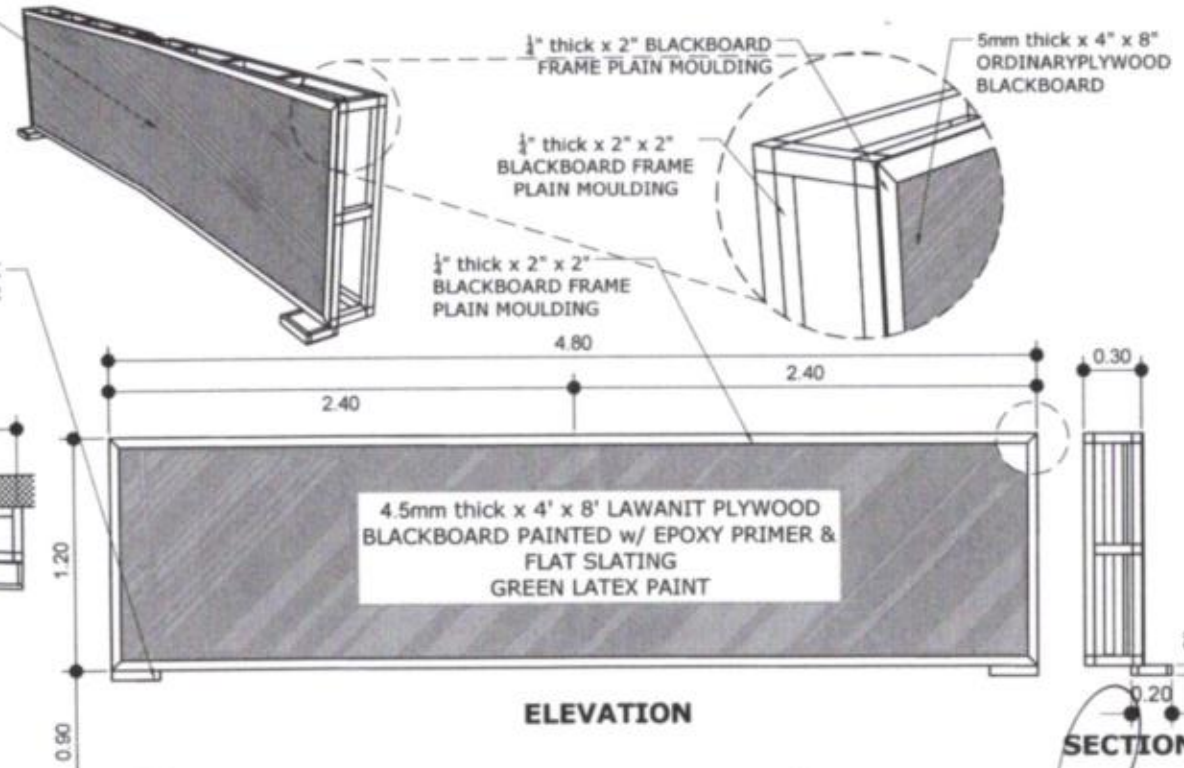

BLACK BOARD DETAIL

A-5 | 1 3 SCALE: NTS

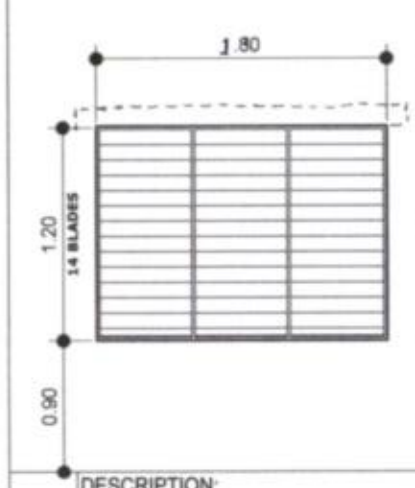

W2

DESCRIPTION: JALOUSIE WINDOW w/ CLEAR GLASS BLADES ON SID ALUM. HOUSING ON 50 x 150mm WOODJAMBS/FRAMES

LOCATION: Class Room Front Section

UNIT: 4

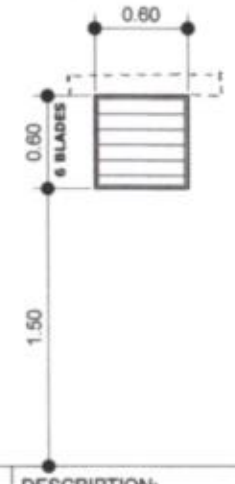

W3

DESCRIPTION: JALOUSIE WINDOW w/ CLEAR GLASS BLADES ON SID ALUM. HOUSING ON 50 x 150mm WOODJAMBS/FRAMES

LOCATION: CR.

UNIT: 2

SCHEDULE OF WINDOWS

A-5 | 3 3 SCALE: 1:50 MTS.

REPUBLIC OF THE PHILIPPINES PROVINCE OF SOUTH COTABATO OFFICE OF THE PROVINCIAL ENGINEER PLANNING, PROGRAMMING & DESIGNING DIVISION KORONADAL CITY	PROJECT TITLE & LOCATION:	DRAFTED BY:	PREPARED BY:	CHECKED BY:	SUBMITTED BY:	RECOMMENDING APPROVAL:	APPROVED:	SHEET NO.
	CONSTRUCTION OF TWO (2) CLASSROOM BUILDING WITH ATTACHED TOILET Ubo Elementary School-Lamfenek Extension, Brgy. Lamfugon, Cakiu Sebu, South Cotabato	JHICOR L. LAMUGON, UAP ARCHITECT (J.O.)	CARL FRANCIS I. GARCIA, UAP ARCHITECT II	GLENDALE B. MARFIL, UAP ARCHITECT III - VERTICAL SECTION HEAD	FREDERICK D. SOSMANO,MPA HEAD, Planning, Prog'g & Designing Division	MARNILO S. APEROCHO, MPA PROVINCIAL ENGINEER	REYNALDO S. TAMAYO, JR. PROVINCIAL GOVERNOR	A 5 / 5 22

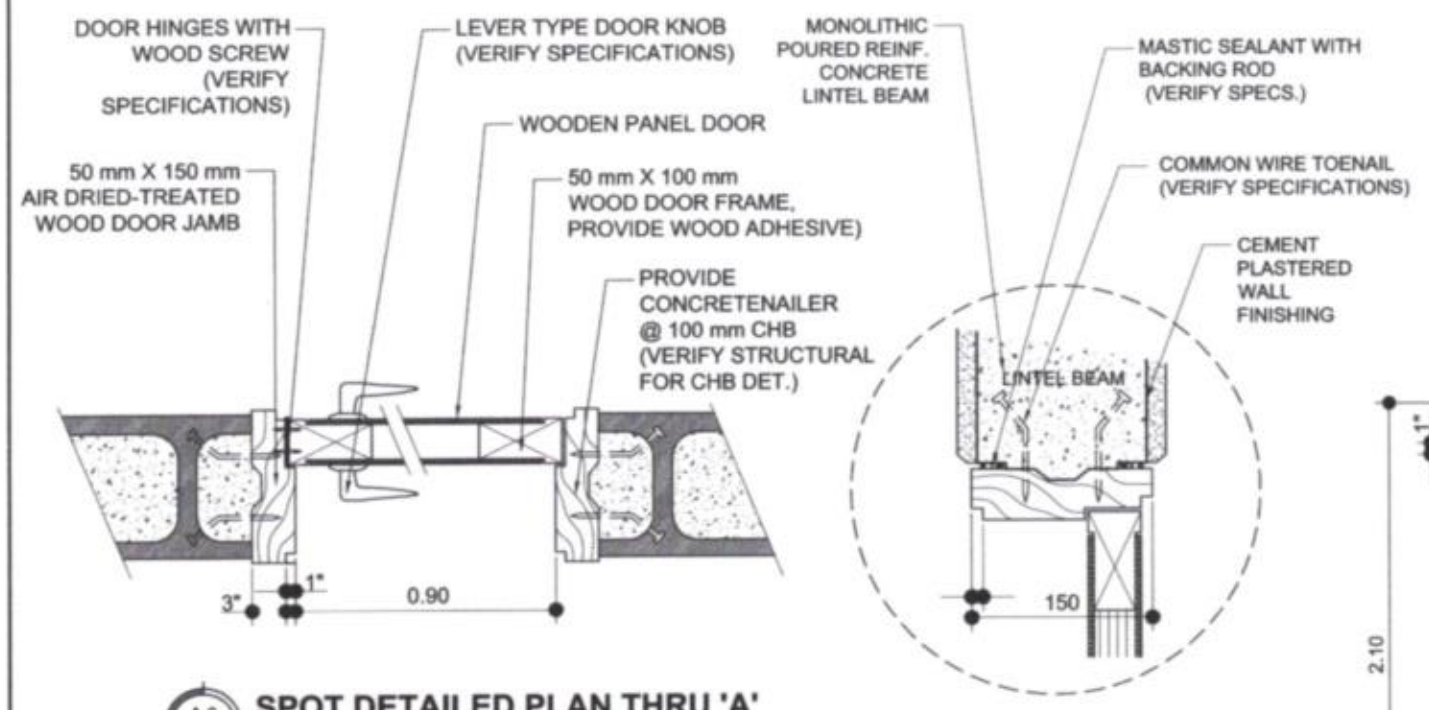

A-6 4 8 **SPOT DETAILED PLAN THRU 'A'**
N T S

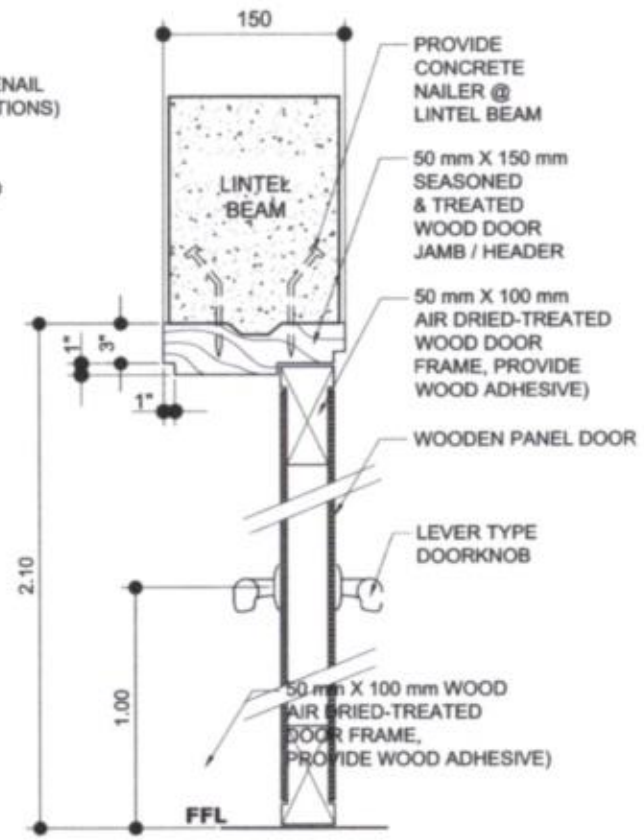

SPOT DETAIL SECTION THRU 'B'
N T S

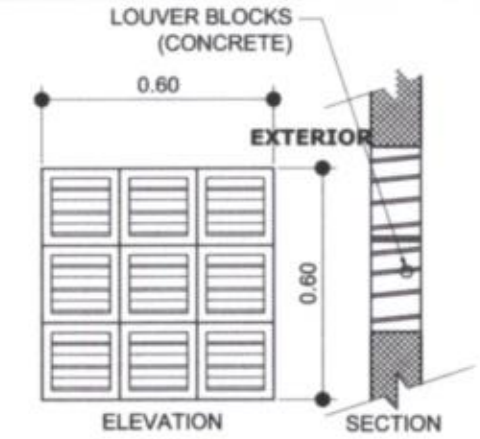

A-6 7 8 **LOUVER BLOCKS DETAIL**
SCALE: 1:20 MTS

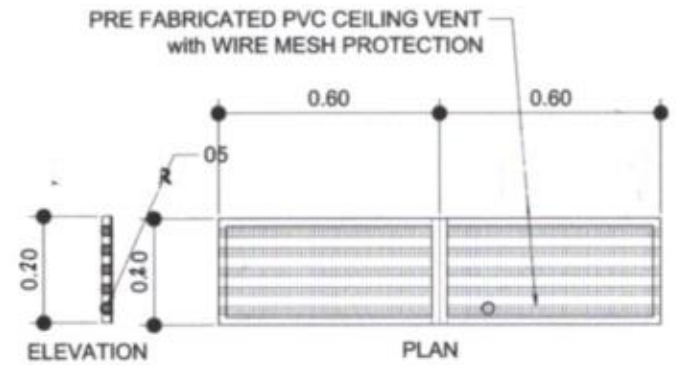

A-6 8 8 **TYP. CEILING VENT DET.**
SCALE: 1:20 MTS

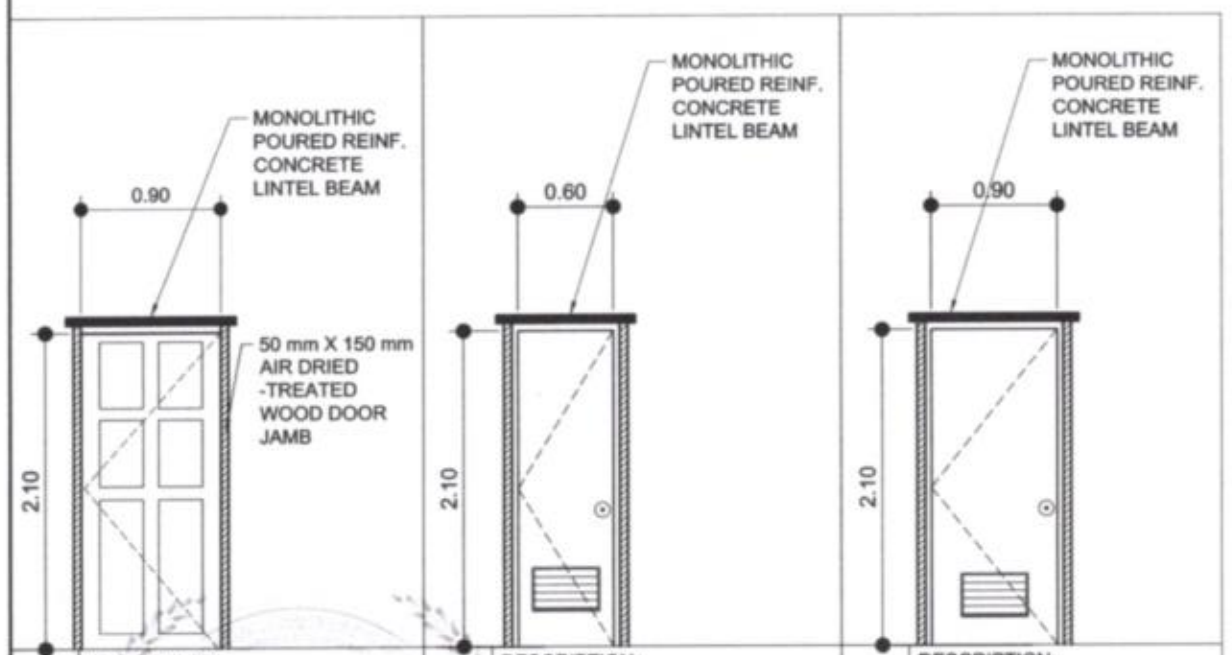

D1	DESCRIPTION: Wooden Panel Door w/ WOODEN AND JAMB WITH LEVER TYPE DOOR KNOB	D2	DESCRIPTION: PVC DOOR w/ LOUVERED VENT AND LEVER TYPE DOOR KNOB	D3	DESCRIPTION: PVC DOOR w/ LOUVERED VENT AND LEVER TYPE DOOR KNOB
	LOCATION: CLASSROOM		LOCATION: Comfort Rooms		LOCATION: Comfort Rooms/ PWD
	UNIT: 4		UNIT: 1		UNIT: 1

A-6 1 8 **SCHEDULE OF DOORS**
SCALE: 1:50 MTS.

A-6 3 8 **WOOD FLUSH DOOR DETAIL**
SCALE: NTS

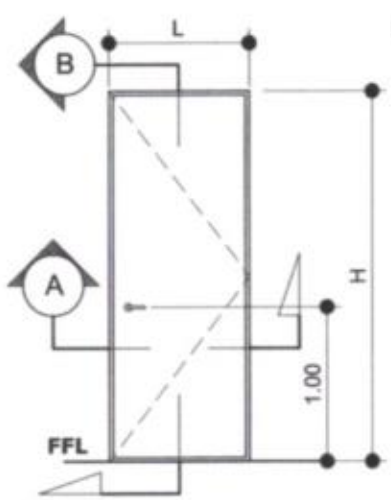

A-6 2 8 **DOOR SECTIONAL ELEV.**
SCALE: 1:50 MTS

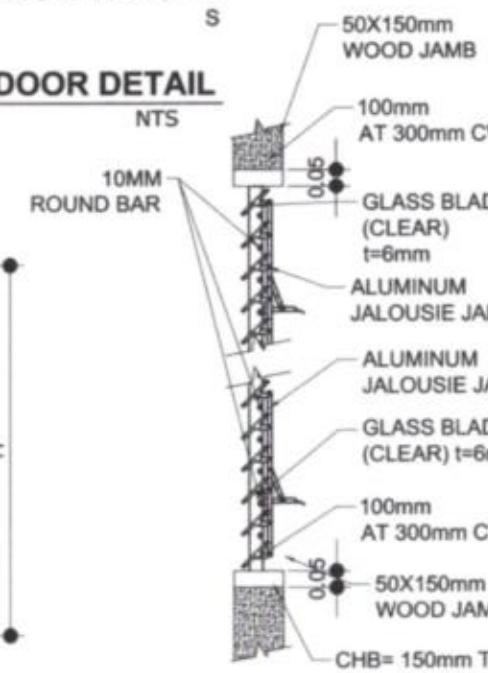

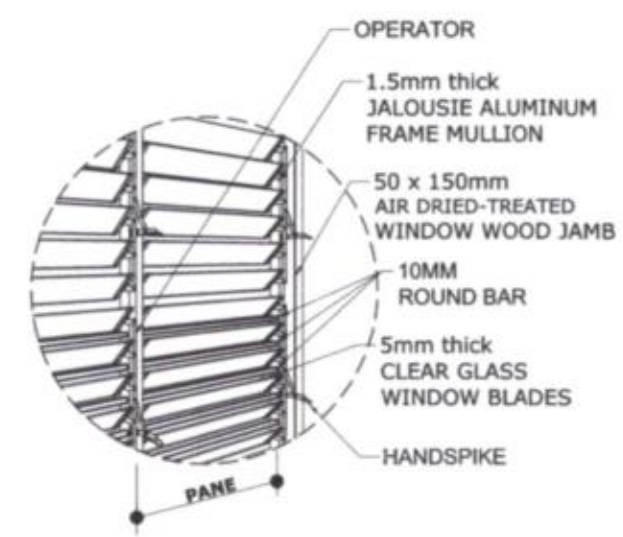

A-6 5 8 **JALOUSIE SHOP DRAWING**
SCALE: NTS

REPUBLIC OF THE PHILIPPINES PROVINCE OF SOUTH COTABATO OFFICE OF THE PROVINCIAL ENGINEER PLANNING, PROGRAMMING & DESIGNING DIVISION KORONADAL CITY	PROJECT TITLE & LOCATION:	DRAFTED BY:	PREPARED BY:	CHECKED BY:	SUBMITTED BY:	RECOMMENDING APPROVAL:	APPROVED:	SHEET NO.
	CONSTRUCTION OF TWO (2) CLASSROOM BUILDING WITH ATTACHED TOILET Ubo Elementary School-Lamfenak Extension, Brgy. Lamfugon, Lake Sebu, South Cotabato	JHICOR L. FANUGON, UAP ARCHITECT (J.O.)	CARL FRANCIS I. GARCIA, UAP ARCHITECT II	GLENDALE B. MARFIL, UAP ARCHITECT III - VERTICAL SECTION HEAD	FREDERICK B. SORIANO,MPA HEAD, Planning, Prog'g & Designing Division	MARNILO S. APEROCHO, MPA PROVINCIAL ENGINEER	REYNALDO S. TAMAYO, JR. PROVINCIAL GOVERNOR	A 6 / 6 22

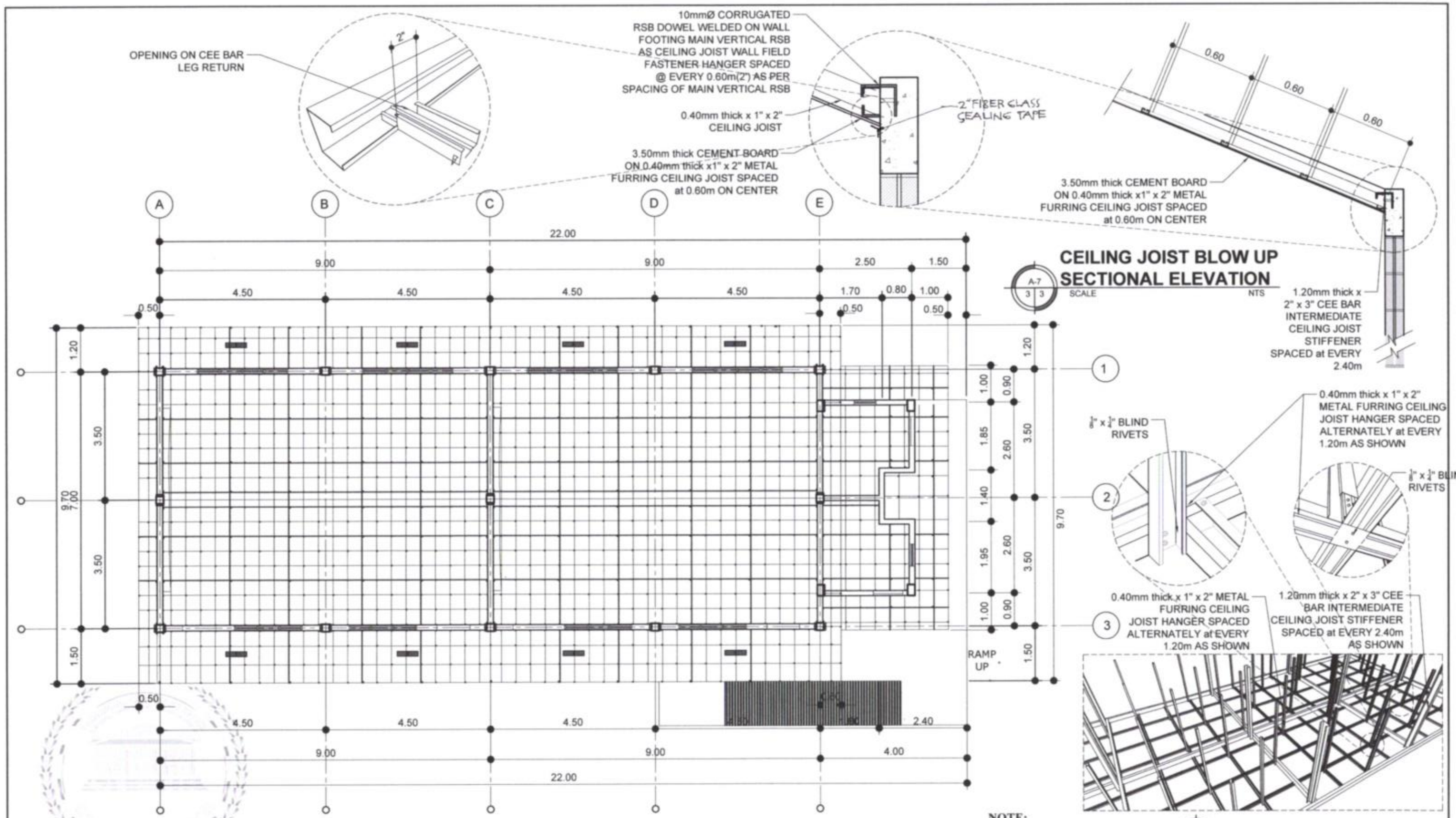

CEILING JOIST BLOW UP SECTIONAL ELEVATION

A-7 / 3 3 SCALE NTS

REFLECTED CEILING PLAN

A-7 / 1 3 SCALE: 1:100 MTS

CEILING DETAIL

A-7 / 2 3 SCALE NTS

NOTE:
USED NON SAG EPOXY SEALANT ON CEILING PANELS (CEMENT BOARD) AS JOINT SEALER PRIOR UPON BODY FILLER APPLICATION

REPUBLIC OF THE PHILIPPINES PROVINCE OF SOUTH COTABATO OFFICE OF THE PROVINCIAL ENGINEER PLANNING, PROGRAMMING & DESIGNING DIVISION KORONADAL CITY	PROJECT TITLE & LOCATION:	DRAFTED BY:	PREPARED BY:	CHECKED BY:	SUBMITTED BY:	RECOMMENDING APPROVAL:	APPROVED:	SHEET NO.
	CONSTRUCTION OF TWO (2) CLASSROOM BUILDING WITH ATTACHED TOILET Ubo Elementary School-Lamfenek Extension, Brgy. Lamfugon, Lake Sebu, South Cotabato	JHICOR L. EARUGON, UAP ARCHITECT (J.O.)	CARL FRANCIS I. GARCIA, UAP ARCHITECT II	GLENDALE B. MARFIL, UAP ARCHITECT III - VERTICAL SECTION HEAD	FREDERICK D. SORIANO,MPA HEAD, Planning, Prog'g & Designing Division	MARNILO S. APEROCHO, MPA PROVINCIAL ENGINEER	REYNALDO S. TAMAYO, JR. PROVINCIAL GOVERNOR	A 7 / 7 22

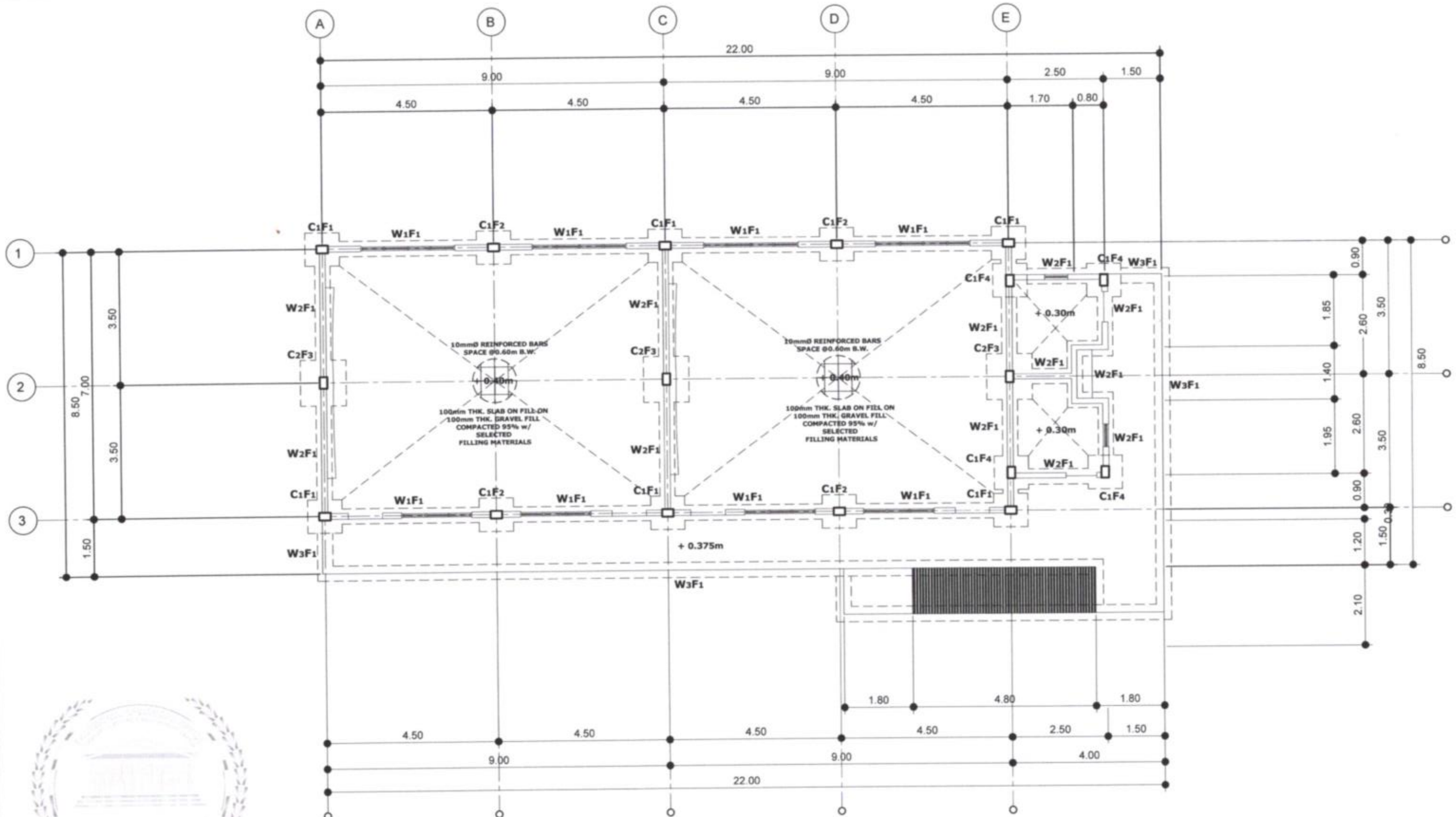

S 1 / 1 1 FOUNDATION PLAN
SCALE: 1:100 MTS.

REPUBLIC OF THE PHILIPPINES PROVINCE OF SOUTH COTABATO OFFICE OF THE PROVINCIAL ENGINEER PLANNING, PROGRAMMING & DESIGNING DIVISION KORONADAL CITY	PROJECT TITLE & LOCATION:	DRAFTED BY:	PREPARED BY:	CHECKED BY:	SUBMITTED BY:	RECOMMENDING APPROVAL:	APPROVED:	SHEET NO.
	CONSTRUCTION OF TWO (2) CLASSROOM BUILDING WITH ATTACHED TOILET Ubo Elementary School-Lamfenek Extension, Brgy. Lamfugon, Lake Sebu, South Cotabato	JHICOR L. FANUGON, UAP ARCHITECT (J.O.)	KRISTY ANNE S. BELVANEZ ENGINEER I	GLENDALE B. MARFIL, UAP ARCHITECT II - VERTICAL SECTION HEAD	FREDERICK D. SORIANO,MPA HEAD, Planning, Prog'g & Designing Division	MARNILO S. APPROCHO, MPA PROVINCIAL ENGINEER	REYNALDO S. TAMAYO, JR. PROVINCIAL GOVERNOR	S 1 / 8 22

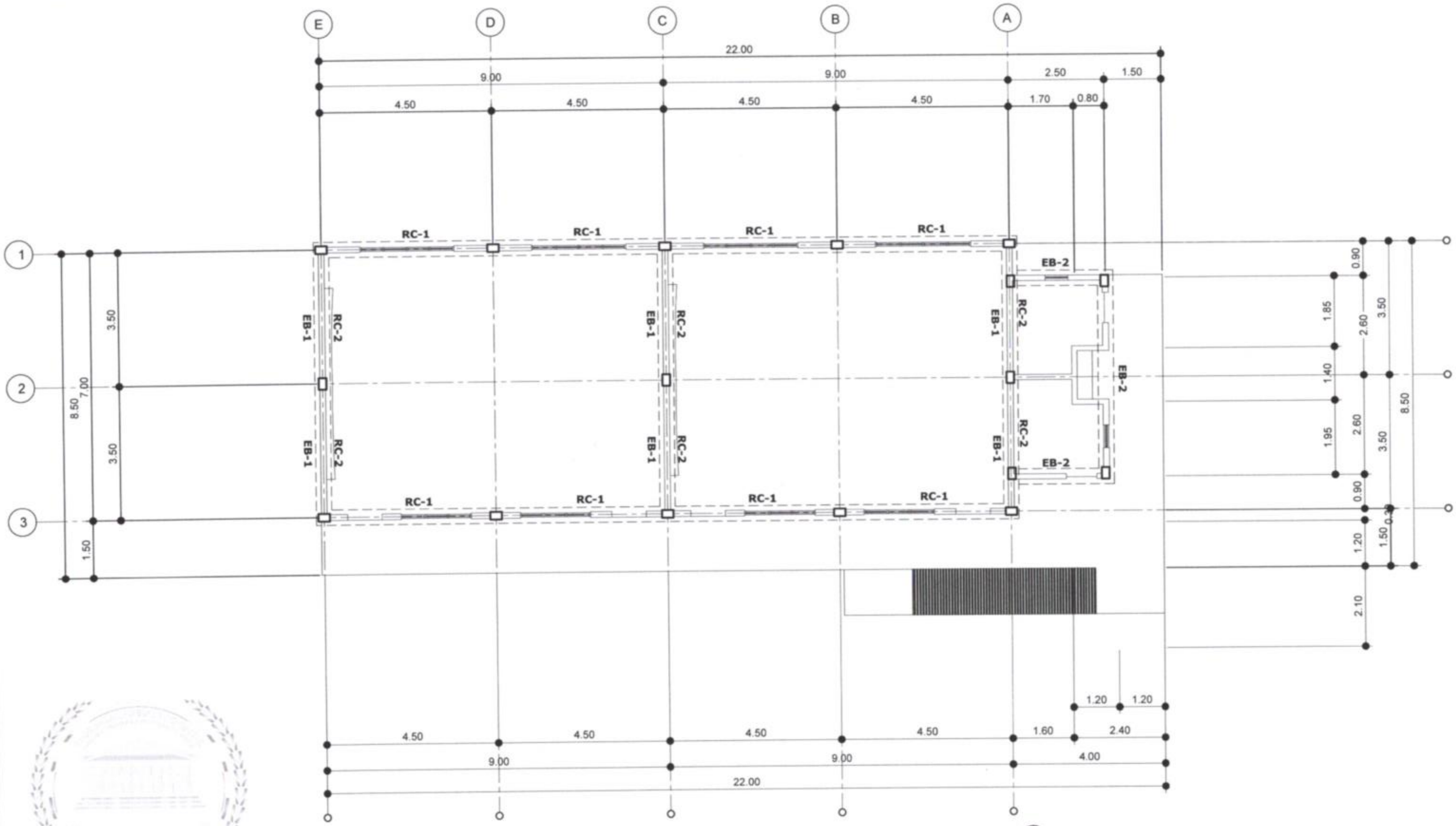

S 1 / 1 1 BEAM PLAN
SCALE: 1:100 MTS.

REPUBLIC OF THE PHILIPPINES PROVINCE OF SOUTH COTABATO OFFICE OF THE PROVINCIAL ENGINEER PLANNING, PROGRAMMING & DESIGNING DIVISION KORONADAL CITY	PROJECT TITLE & LOCATION: CONSTRUCTION OF TWO (2) CLASSROOM BUILDING WITH ATTACHED TOILET Ubo Elementary School-Lamfenek Extension, Brgy. Lamfugon, Lake Sebu, South Cotabato	DRAFTED BY: JHICOR L. FANUGON, UAP ARCHITECT (J.O.)	PREPARED BY: KRISTIANN S. SERVANEZ ENGINEER I	CHECKED BY: GLENDALE B. MARFIL, UAP ARCHITECT III - VERTICAL SECTION HEAD	SUBMITTED BY: FREDERICK D. SORIANO,MPA HEAD, Planning, Prog'g & Designing Division	RECOMMENDING APPROVAL: MARNILO S. APEROCHO, MPA PROVINCIAL ENGINEER	APPROVED: REYNALDO S. TAMAYO, JR. PROVINCIAL GOVERNOR	SHEET NO. S 1 / 9 22

SCHEDULE OF FOOTING

FOOTING MARK	FOOTING DIMENSIONS (mm) LENGTH (L)	WIDTH (W)	DEPTH (D)	THICKNESS (t)	REINFORCEMENTS BAR X	BAR Y	
F - 1	800	800	1200	250	4 - 16mmØ	4 - 16mmØ	SQUARE FOOTING
F - 2	1000	1000	1200	250	4 - 16mmØ	4 - 16mmØ	SQUARE FOOTING
F - 3	900	900	1200	250	4 - 16mmØ	4 - 16mmØ	SQUARE FOOTING
F - 4	800	800	800	250	4 - 16mmØ	4 - 16mmØ	SQUARE FOOTING

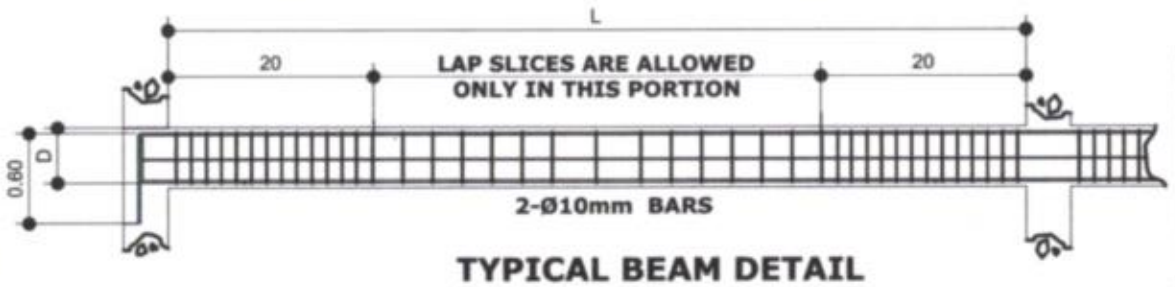

TYPICAL BEAM DETAIL
N T S

DESIGN CRITERIA

A . CONCRETE

fc' = 20.685 Mpa (3,000 Psi), minimum compressive strength of concrete
a 28 days unless otherwise specified.

B. REBAR

fy' = 230 Mpa (33,000 Psi), minimum yield strength of reinforcing bars unless otherwise specified

C. STRUCTURAL

Fy = 248 Mpa (36 Ksi), specified minimum yield strength unless otherwise specified

D. FOUNDATION

SBP = 95.706 Kpa (2,000 Psi),w as used in the design for all footings.

No footing shall rest on fill.

COLUMN SCHEDULE

LEVEL	C - 1	C - 2
FOUNDATION LEVEL TO ROOF LEVEL	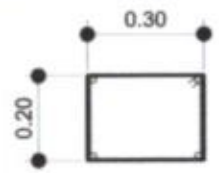 MAIN BAR: 4 - Ø 16mm; TIES: Ø 10mm 1@50, 8@75, REST @ 150mm TO CENTER	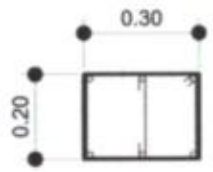 MAIN BAR: 6 - Ø 16mm; TIES: Ø 10mm 1@50, 8@75, REST @ 150mm TO CENTER

BEAM SCHEDULE

FLOOR LEVEL	BEAM MARK	BEAM DIMENSIONS (in / mm) b	h	STEEL REINFORCEMENTS REBAR (mm Ø)	LEFT TOP	LEFT BOTTOM	MID SPAN TOP	MID SPAN BOTTOM	RIGHT TOP	RIGHT BOTTOM	STIRRUPS Ø 10mm (UNLESS NOTED OTHERWISE)
ROOF LEVEL	RC-1	150	400	Ø 16mm	2	2	2	2	2	2	1@50, 8@100, REST @200
	RC-2	150	400	Ø 16mm	2	2	2	2	2	2	1@50, 8@100, REST @200
	EB-1	150	250	Ø 10mm	2	2	2	2	2	2	1@50, REST @200
	EB-2	150	200	Ø 10mm	2	2	2	2	2	2	1@50, REST @200

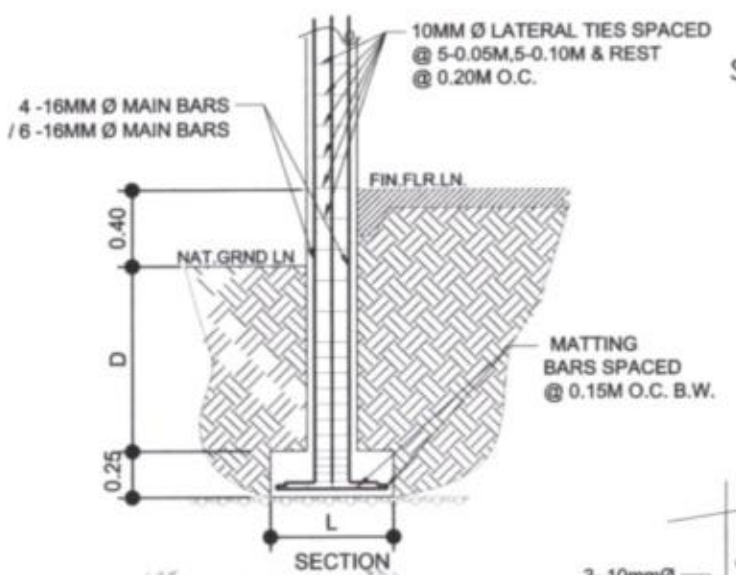

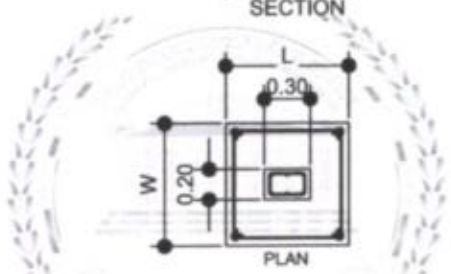

CF DETAIL (S-2 / 1 7)
SCALE 1:20 MTS

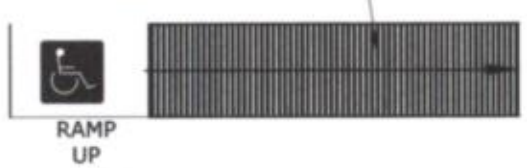

RAMP PLAN (S-2 / 5 7)
SCALE: 1:50 MTS.

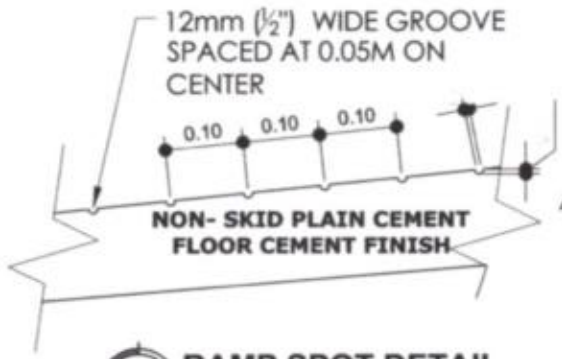

RAMP SPOT DETAIL (S-2 / 6 6)
SCALE 1:50 MTS

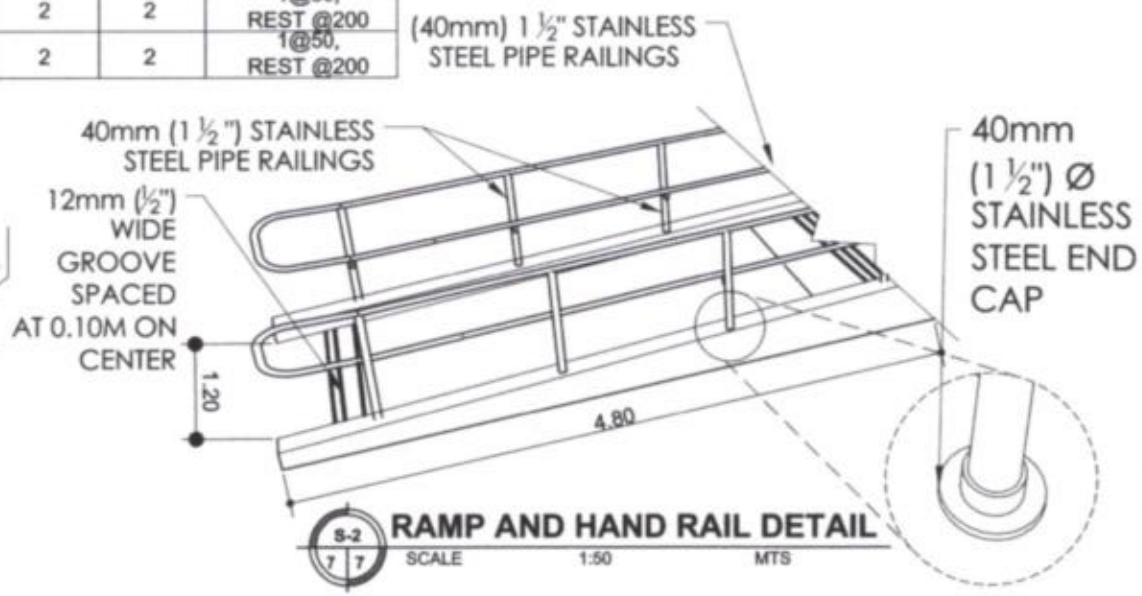

RAMP AND HAND RAIL DETAIL (S-2 / 7 7)
SCALE 1:50 MTS

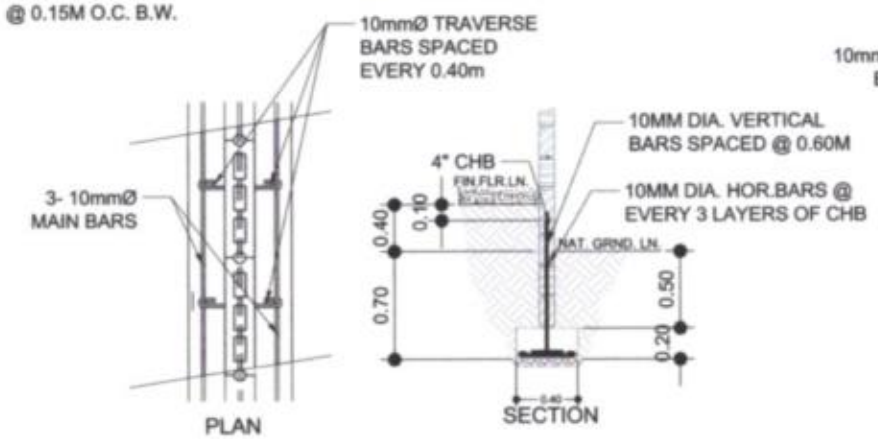

WALL (1) FOOTING (1) DETAIL (S-2 / 2 7)
SCALE 1:50 MTS

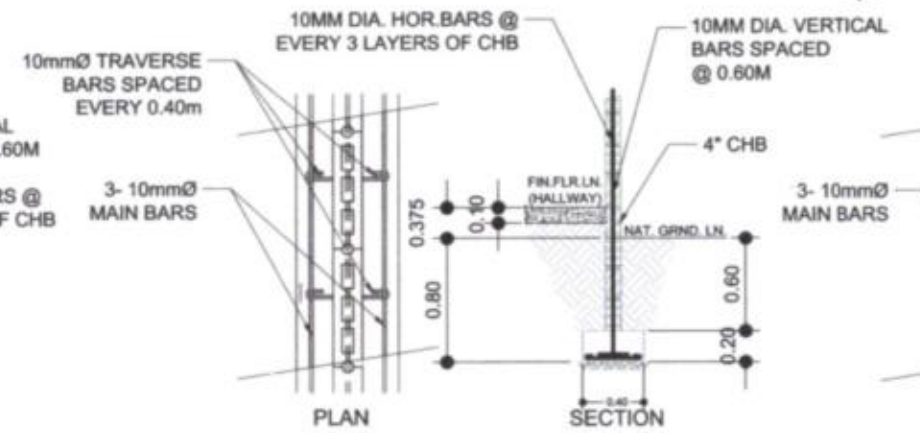

WALL (2) FOOTING (1) DETAIL (S-2 / 3 7)
SCALE 1:50 MTS

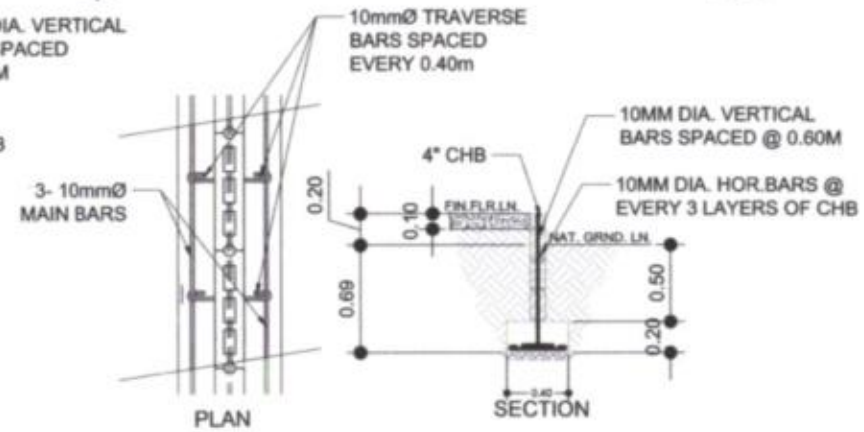

WALL (3) FOOTING (1) DETAIL (S-2 / 4 7)
SCALE 1:50 MTS

REPUBLIC OF THE PHILIPPINES PROVINCE OF SOUTH COTABATO OFFICE OF THE PROVINCIAL ENGINEER PLANNING, PROGRAMMING & DESIGNING DIVISION KORONADAL CITY	PROJECT TITLE & LOCATION:	DRAFTED BY:	PREPARED BY:	CHECKED BY:	SUBMITTED BY:	RECOMMENDING APPROVAL:	APPROVED:	SHEET NO:
	CONSTRUCTION OF TWO (2) CLASSROOM BUILDING WITH ATTACHED TOILET Ubo Elementary School-Lamfenek Extension, Brgy. Lamfugon, Lake Sebu, South Cotabato	JHICOR L. FANUGON, UAP ARCHITECT (J.O.)	KRISTY ANN S. SERVANEZ ENGINEER I	GLENDALE B. MARFIL, UAP ARCHITECT III-VERTICAL SECTION HEAD	FREDERICK D. SORIANO,MPA HEAD, Planning, Prog'g & Designing Division	MARNILO S. APEROCHO, MPA PROVINCIAL ENGINEER	REYNALDO S. TAMAYO, JR. PROVINCIAL GOVERNOR	S 2 10 22

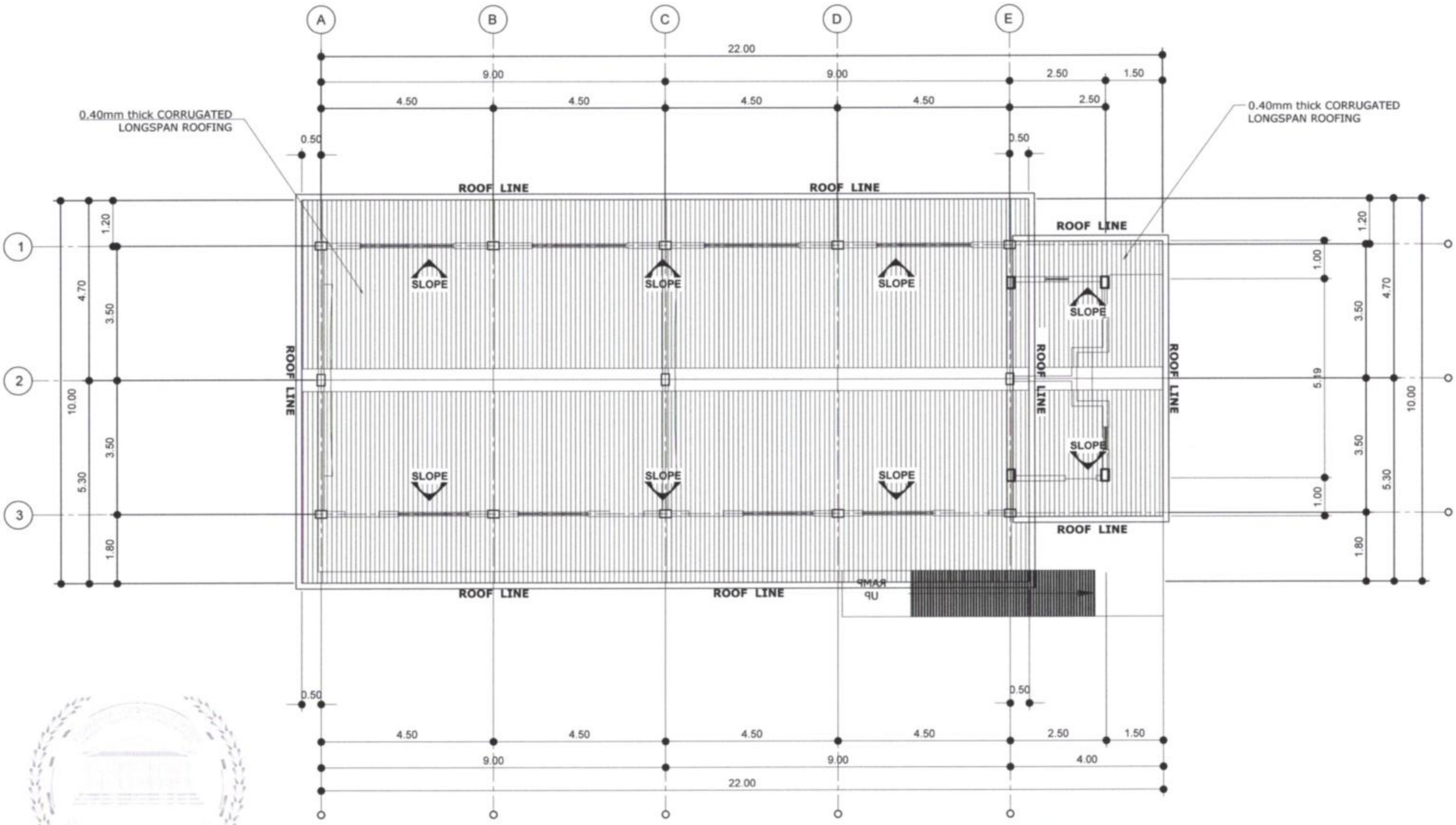

S-3 1 1 **R O O F P L A N**

SCALE: 1:100 MTS

REPUBLIC OF THE PHILIPPINES PROVINCE OF SOUTH COTABATO OFFICE OF THE PROVINCIAL ENGINEER PLANNING, PROGRAMMING & DESIGNING DIVISION KORONADAL CITY	PROJECT TITLE & LOCATION:	DRAFTED BY:	PREPARED BY:	CHECKED BY:	SUBMITTED BY:	RECOMMENDING APPROVAL:	APPROVED:	SHEET NO:
	CONSTRUCTION OF TWO (2) CLASSROOM BUILDING WITH ATTACHED TOILET Ubo Elementary School-Lamferiek Extension, Brgy. Lamfugon, Lake Sebu, South Cotabato	JHICOR L. FANTGON, UAP ARCHITECT (J.O.)	KRISTY ANN S. SERVANEZ ENGINEER I	GLENDALE B. MARFIL, UAP ARCHITECT III- VERTICAL SECTION HEAD	FREDERICK B. SORIANO,MPA HEAD, Planning, Prog'g & Designing Division	MARNILO C. PEROCHO, MPA PROVINCIAL ENGINEER	REYNALDO G. TAMAYO, JR. PROVINCIAL GOVERNOR	S 3 11 22

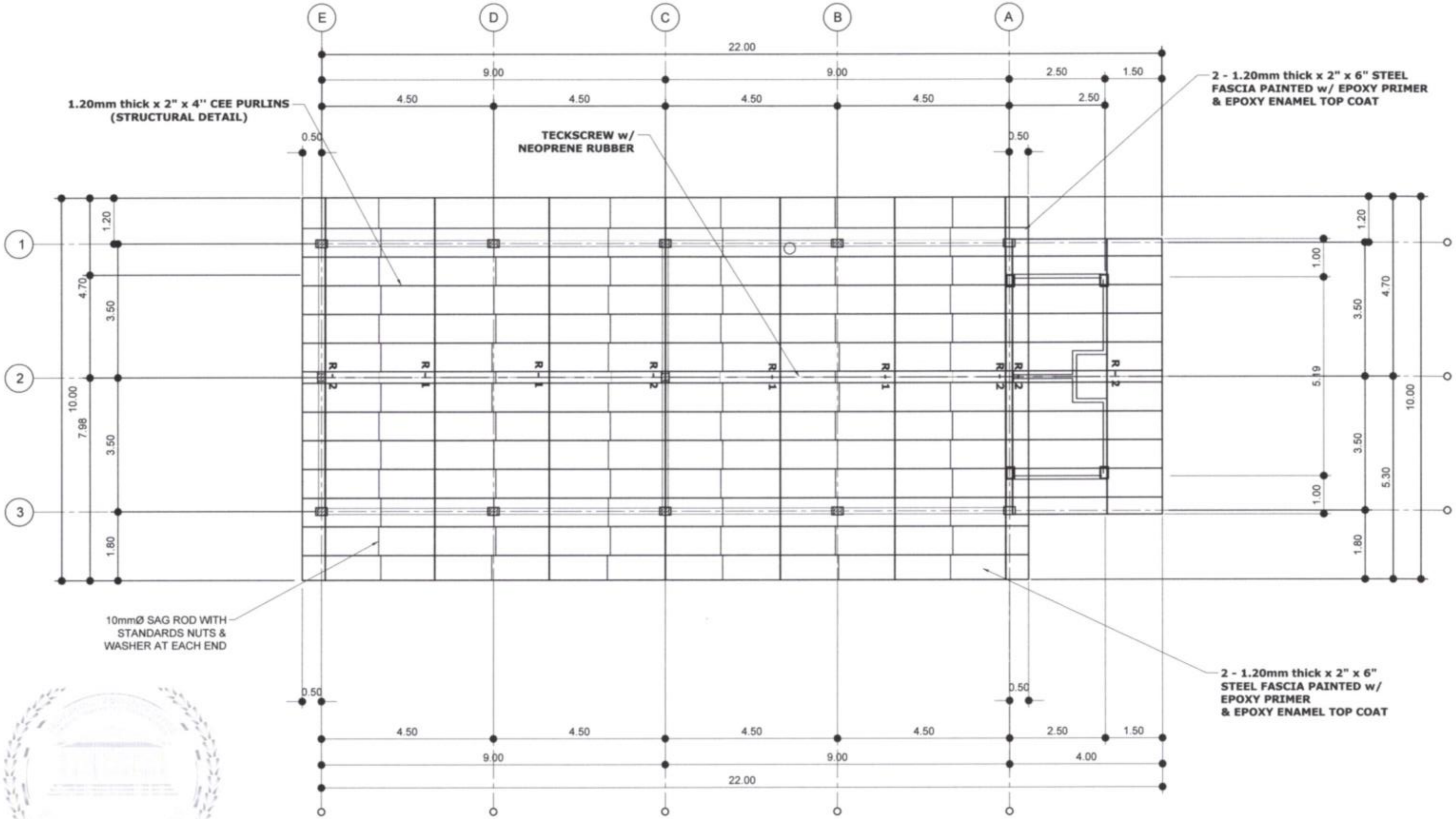

S-4 1 1 **ROOF FRAMING PLAN**
SCALE: 1:100 MTS

REPUBLIC OF THE PHILIPPINES PROVINCE OF SOUTH COTABATO OFFICE OF THE PROVINCIAL ENGINEER PLANNING, PROGRAMMING & DESIGNING DIVISION KORONADAL CITY	PROJECT TITLE & LOCATION:	DRAFTED BY:	PREPARED BY:	CHECKED BY:	SUBMITTED BY:	RECOMMENDING APPROVAL:	APPROVED:	SHEET NO.
	CONSTRUCTION OF TWO (2) CLASSROOM BUILDING WITH ATTACHED TOILET Ubo Elementary School-Lamfenek Extension, Brgy. Lamfugon, Lake Sebu, South Cotabato	JHICOR L. FAMUGON, UAP ARCHITECT (J.O.)	KRISTIANN S. SERVANEZ ENGINEER I	GLENDALE B. MARFIL, UAP ARCHITECT III- VERTICAL SECTION HEAD	FREDERICK B. SORIANO, MPA HEAD, Planning, Prog'g & Designing Division	MARNILO S. AFEROCHO, MPA PROVINCIAL ENGINEER	REYNALDO B. TAMAYO, JR. PROVINCIAL GOVERNOR	S 4 12 22

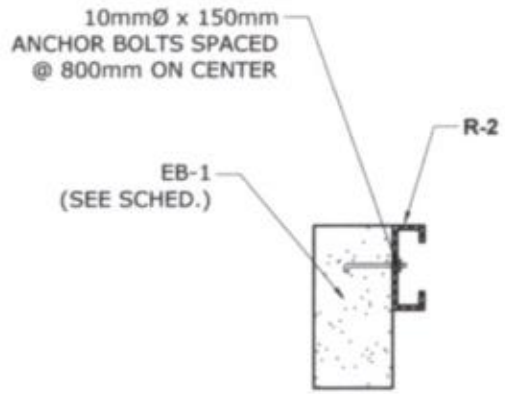

SECTION DETAIL

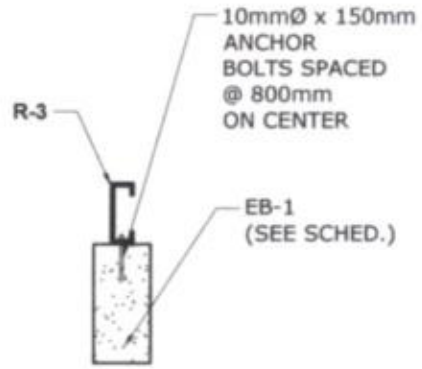

SECTION DETAIL

S-5 6 11 **FAR END ROOF BEAMS**
SCALE: 1:50 MTS

S-5 7 11 **PARTY WALL ROOF BEAM**
SCALE: 1:50 MTS

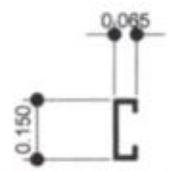

1.20mm x 50mm x 100mm
(2" x 4")

CEE PURLINS

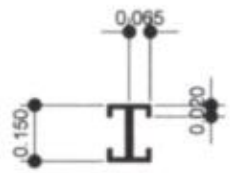

2-1.20mm x 50mm x 150mm
(2" x 6")
CEE PURLINS
R-1

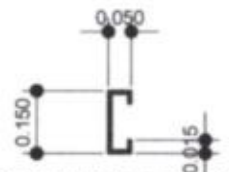

1.20mm x 50mm x 150mm
(2" x 6")
CEE PURLINS
R-2

S-5 3 11 **DETAIL OF PURLINS**
N T S

S-5 4 11 **DETAIL OF RAFTER - 1**
N T S

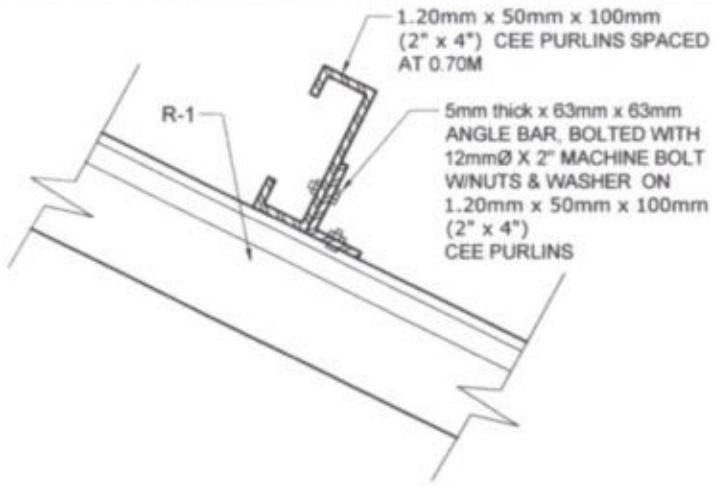

S-5 8 11 **PURLINS CONNECTION DETAIL**
SCALE: 1:10 MTS

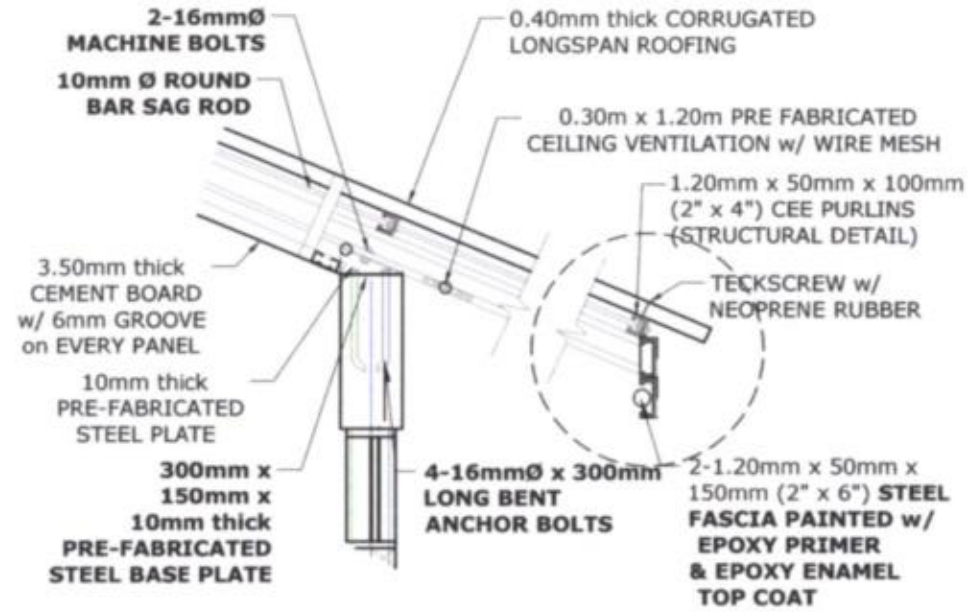

S-5 11 11 **EAVES DETAIL**
SCALE: 1:20 MTS

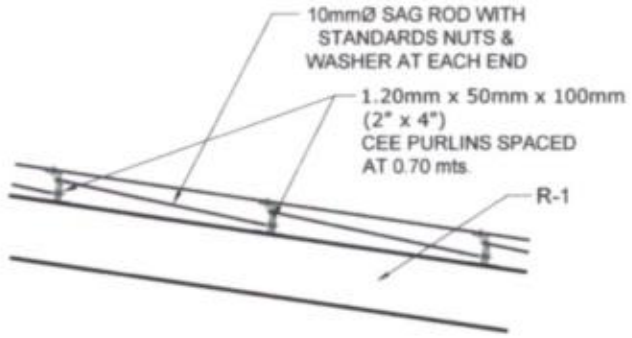

S-5 5 11 **SAG ROD CONNECTION DET.**
SCALE: 1:50 MTS

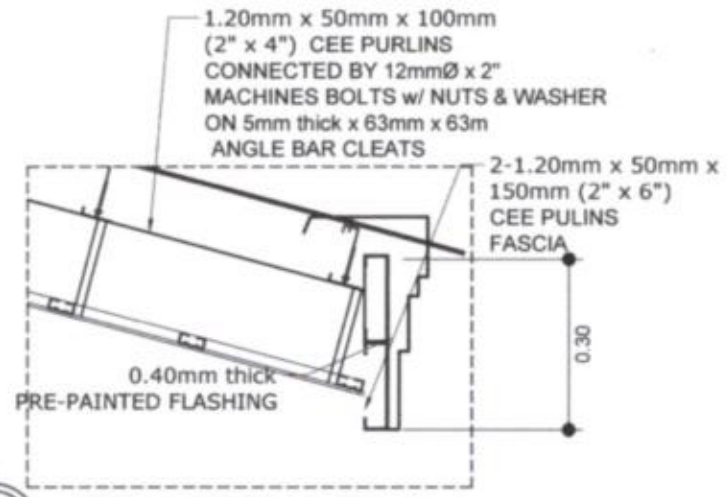

S 5 10 11 **BLIND GUTTER DETAIL**
N T S

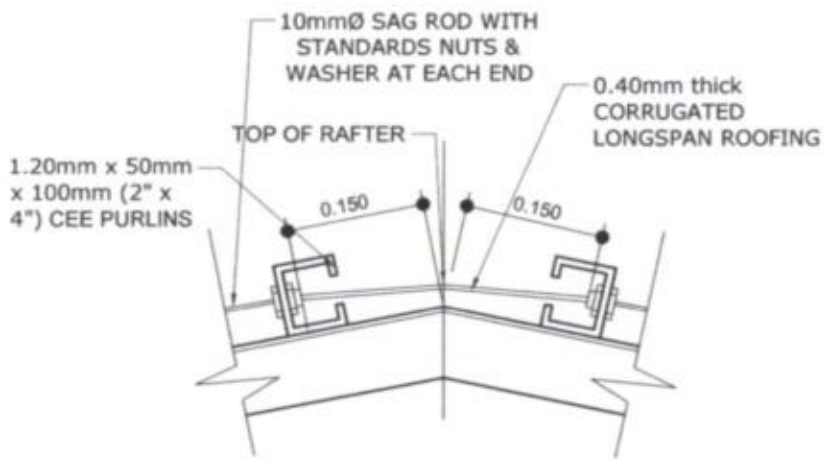

S-5 2 11 **TIE ROD CONNECTION DET.**
SCALE: 1:20 MTS

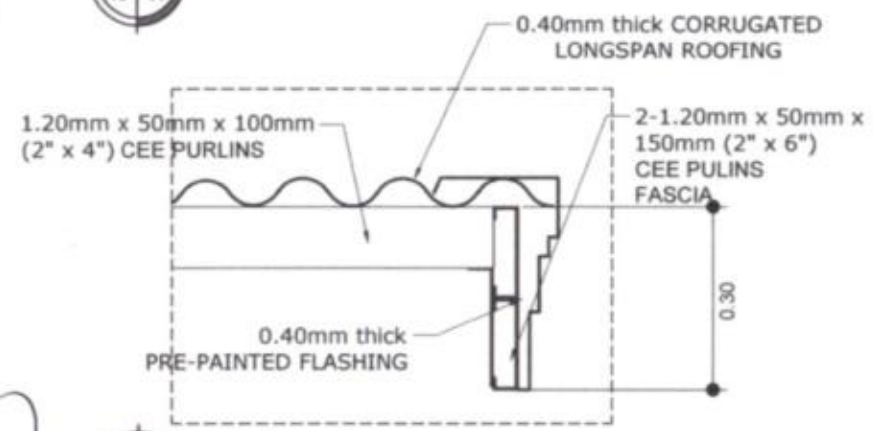

S 5 9 11 **SIDE FLASHING DETAIL**
N T S

S-5 1 11 **TYPICAL RAFTER ANCHORAGE DETAIL**
SCALE: 1:50 MTS

REPUBLIC OF THE PHILIPPINES PROVINCE OF SOUTH COTABATO OFFICE OF THE PROVINCIAL ENGINEER PLANNING, PROGRAMMING & DESIGNING DIVISION KORONADAL CITY	PROJECT TITLE & LOCATION:	DRAFTED BY:	PREPARED BY:	CHECKED BY:	SUBMITTED BY:	RECOMMENDING APPROVAL:	APPROVED:	SHEET NO.
	CONSTRUCTION OF TWO (2) CLASSROOM BUILDING WITH ATTACHED TOILET Ubo Elementary School-Lamfenek Extension, Brgy. Lamfugon, Lake Sebu, South Cotabato	JHICOR L. FANUGON, UAP ARCHITECT (J.O.)	KRISSY ANN S. SERVANEZ ENGINEER I	GLENDALE B. MARFIL, UAP ARCHITECT III-VERTICAL SECTION HEAD	FREDERICK D. SORIANO,MPA HEAD, Planning, Prog'g & Designing Division	MARNILO S. APEROCHO, MPA PROVINCIAL ENGINEER	REYNALDO S. TAMAYO, JR. PROVINCIAL GOVERNOR	S 5 13 22

LEGEND:

W.C.	WATER CLOSET
LAV.	LAVATORY
F.	FAUCET
F.D.	FLOOR DRAIN
C.O.	CLEAN OUT
S.V.	SEPTIC VAULT
R.V.	RELIEF VENT
C.B.	CATCH BASIN
G.V.	GATE VALVE
S.S.	SOIL STACK
C.V.	CHECK VALVE
S.V.	STACK VENT
V.S.	VENT STACK
SHO.	SHOWER

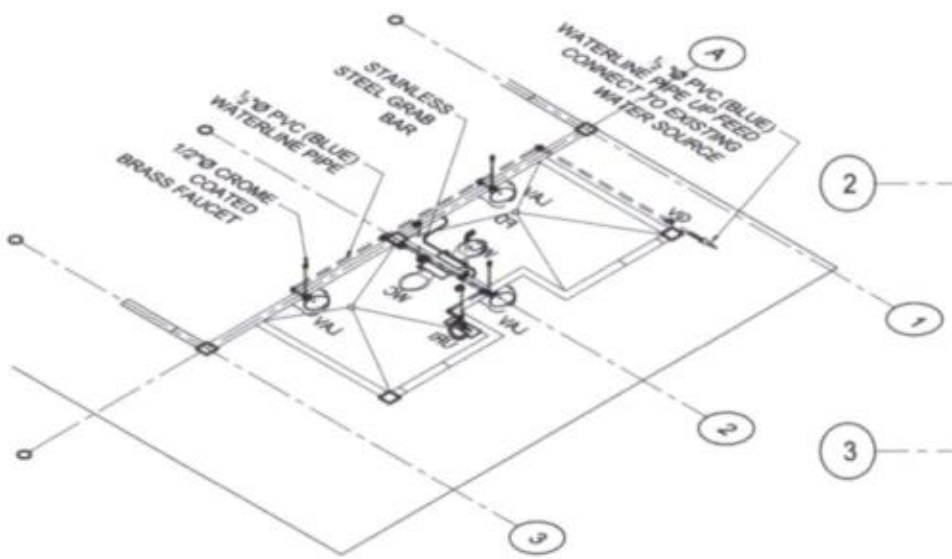

P-1 2 2 **WATER LINE ISOMETRIC LAY-OUT**
SCALE: 1:100 MTS.

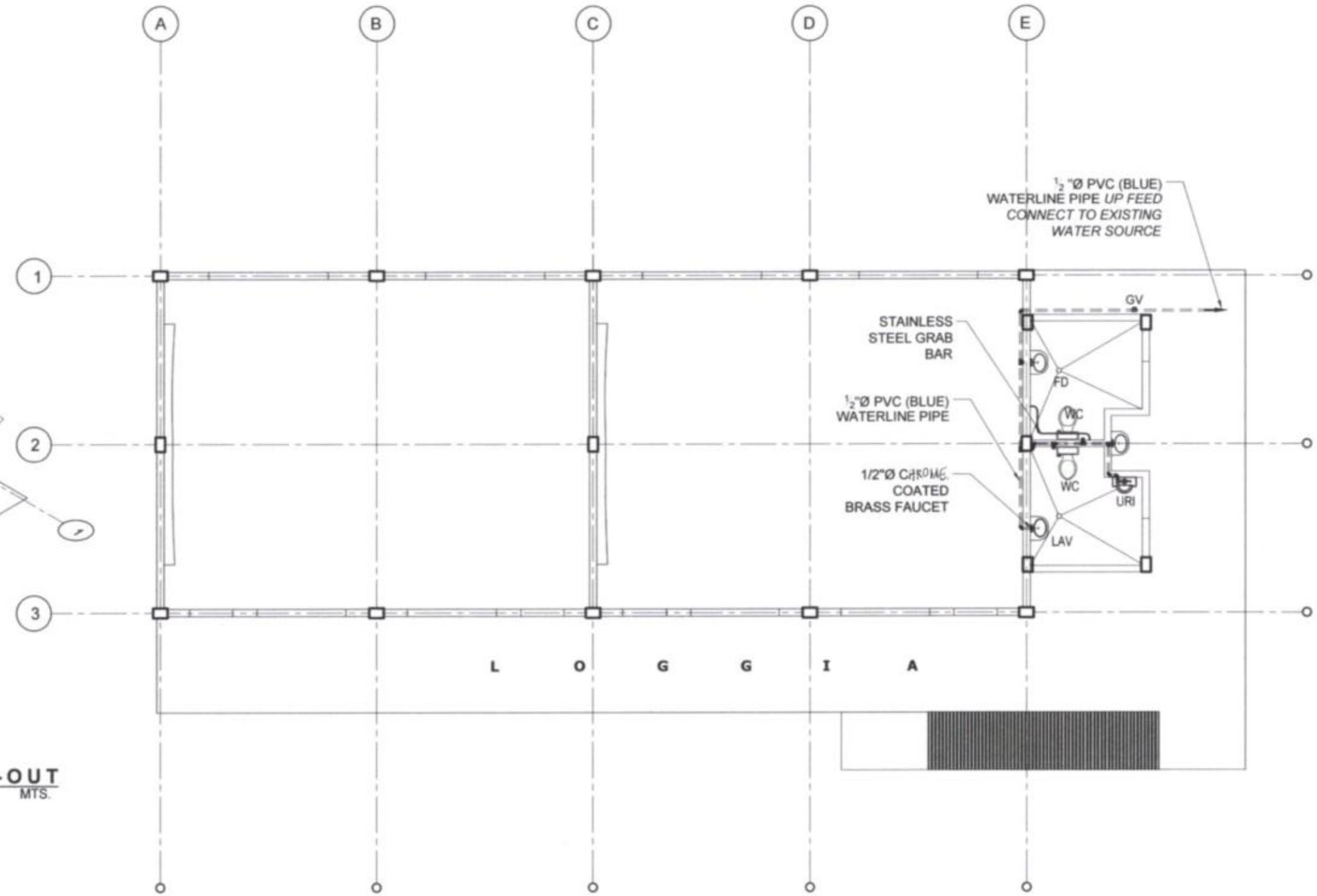

P-1 1 2 **WATER LINE LAY-OUT**
SCALE: 1:100 MTS.

REPUBLIC OF THE PHILIPPINES PROVINCE OF SOUTH COTABATO OFFICE OF THE PROVINCIAL ENGINEER PLANNING, PROGRAMMING & DESIGNING DIVISION KORONADAL CITY	PROJECT TITLE & LOCATION:	DRAFTED BY:	PREPARED BY:	CHECKED BY:	SUBMITTED BY:	RECOMMENDING APPROVAL:	APPROVED:	SHEET NO:
	CONSTRUCTION OF TWO (2) CLASSROOM BUILDING WITH ATTACHED TOILET Ubo Elementary School-Lamferiek Extension, Brgy. Lamfugon, Lake Sebu, South Cotabato	JHICOR L. FANUGON, UAP ARCHITECT (J.O.)	KRISTY ANN S. BERVANEZ ENGINEER I	GLENDALE B. MARFIL, UAP ARCHITECT III - VERTICAL SECTION HEAD	FREDERICK D. SORIANO, MPA HEAD, Planning, Prog'g & Designing Division	MARNILO S. APEROCHO, MPA PROVINCIAL ENGINEER	REYNALDO S. TAMAYO, JR. PROVINCIAL GOVERNOR	P 1 / 14 22

LEGEND:

W.C.	WATER CLOSET
LAV.	LAVATORY
F.	FAUCET
F.D.	FLOOR DRAIN
C.O.	CLEAN OUT
S.V.	SEPTIC VAULT
R.V.	RELIEF VENT
C.B.	CATCH BASIN
G.V.	GATE VALVE
S.S.	SOIL STACK
C.V.	CHECK VALVE
S.V.	STACK VENT
V.S.	VENT STACK
SHO.	SHOWER

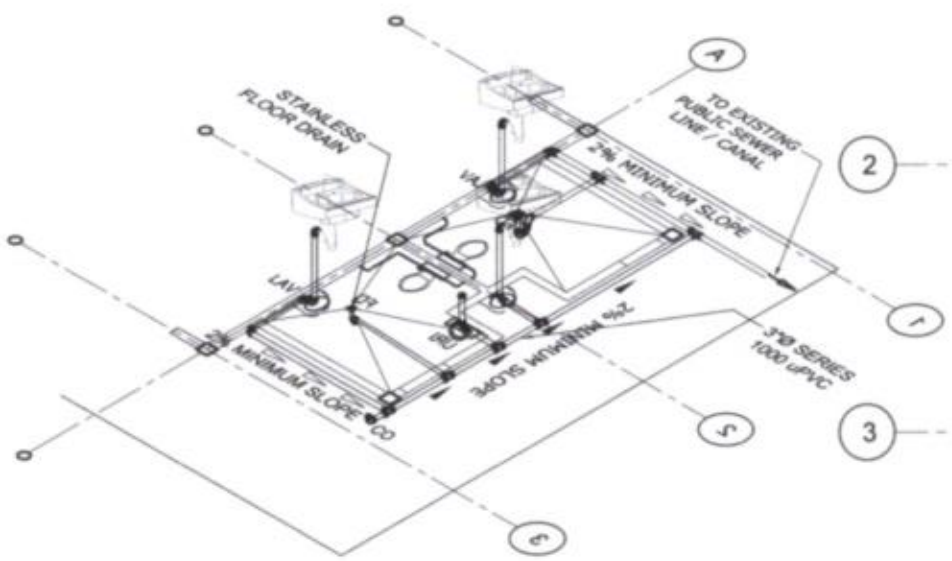

P-2 2 2 **WASTE WATER LINE ISOMETRIC LAY-OUT**
SCALE: 1:100 MTS.

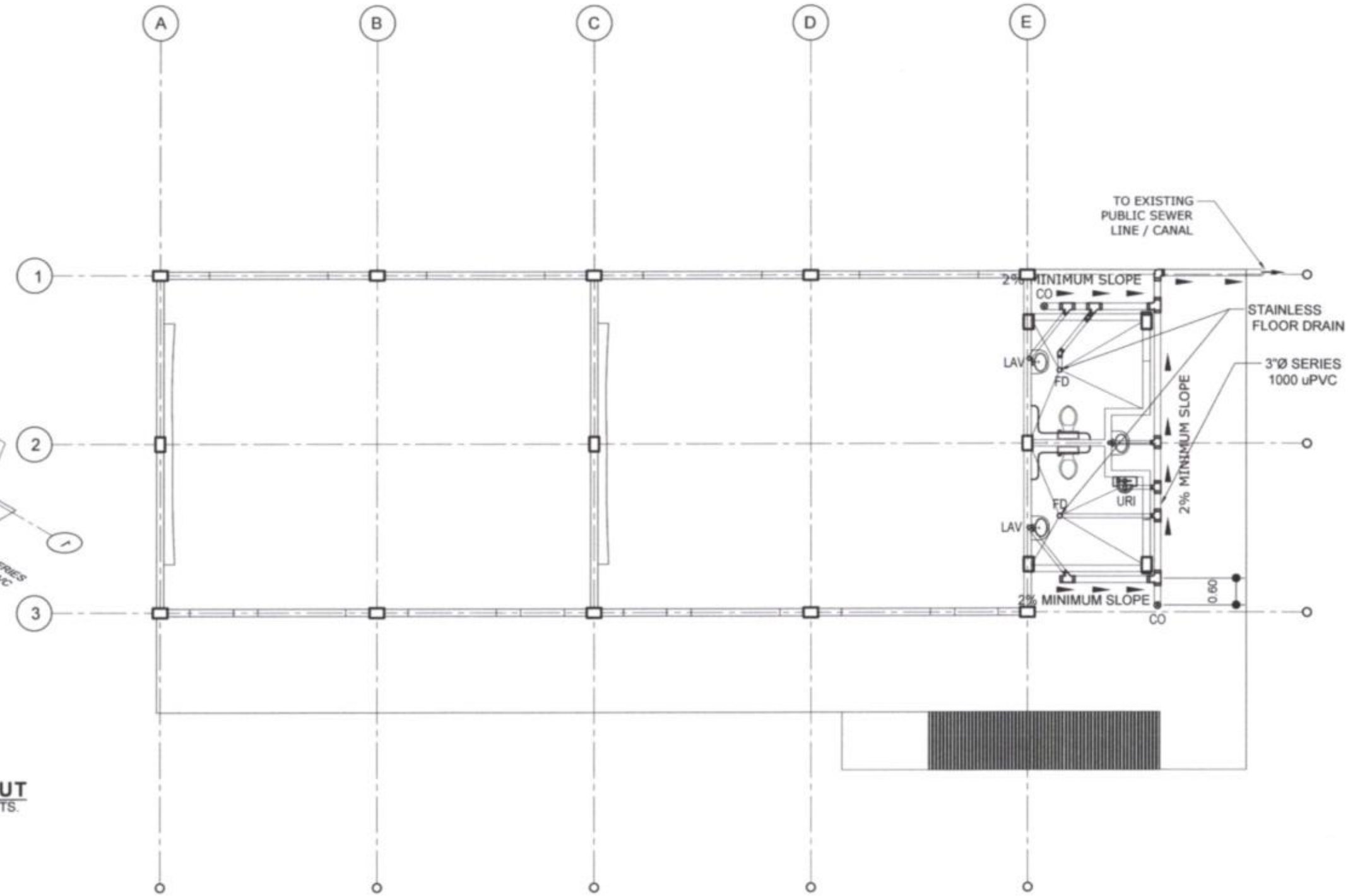

P-2 1 2 **WASTE WATER LINE LAY-OUT**
SCALE: 1:100 MTS.

REPUBLIC OF THE PHILIPPINES PROVINCE OF SOUTH COTABATO OFFICE OF THE PROVINCIAL ENGINEER PLANNING, PROGRAMMING & DESIGNING DIVISION KORONADAL CITY	PROJECT TITLE & LOCATION:	DRAFTED BY:	PREPARED BY:	CHECKED BY:	SUBMITTED BY:	RECOMMENDING APPROVAL:	APPROVED:	SHEET NO.
	CONSTRUCTION OF TWO (2) CLASSROOM BUILDING WITH ATTACHED TOILET Ubo Elementary School-Lamfenek Extension, Brgy. Lamfugon, Lake Sebu, South Cotabato	JHICOR L. FAMUGON, UAP ARCHITECT (J.O.)	KRISTY ANN S. SERVANEZ ENGINEER I	GLENDALE B. MARFIL, UAP ARCHITECT III-VERTICAL SECTION HEAD	FREDERICK D. SOBIANO,MPA HEAD, Planning, Prog'g & Designing Division	MARNILO S. APEROCHO, MPA PROVINCIAL ENGINEER	REYNALDO S. TAMAYO, JR. PROVINCIAL GOVERNOR	P 2 15 22

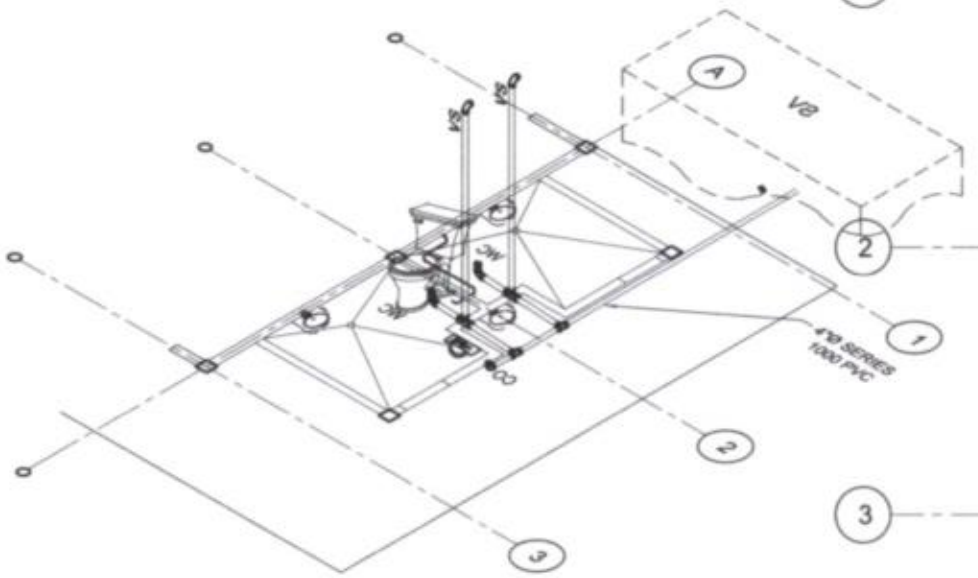

P-3 2 2 **SOIL PIPING ISOMETRIC LAY-OUT**
SCALE: 1:100 MTS.

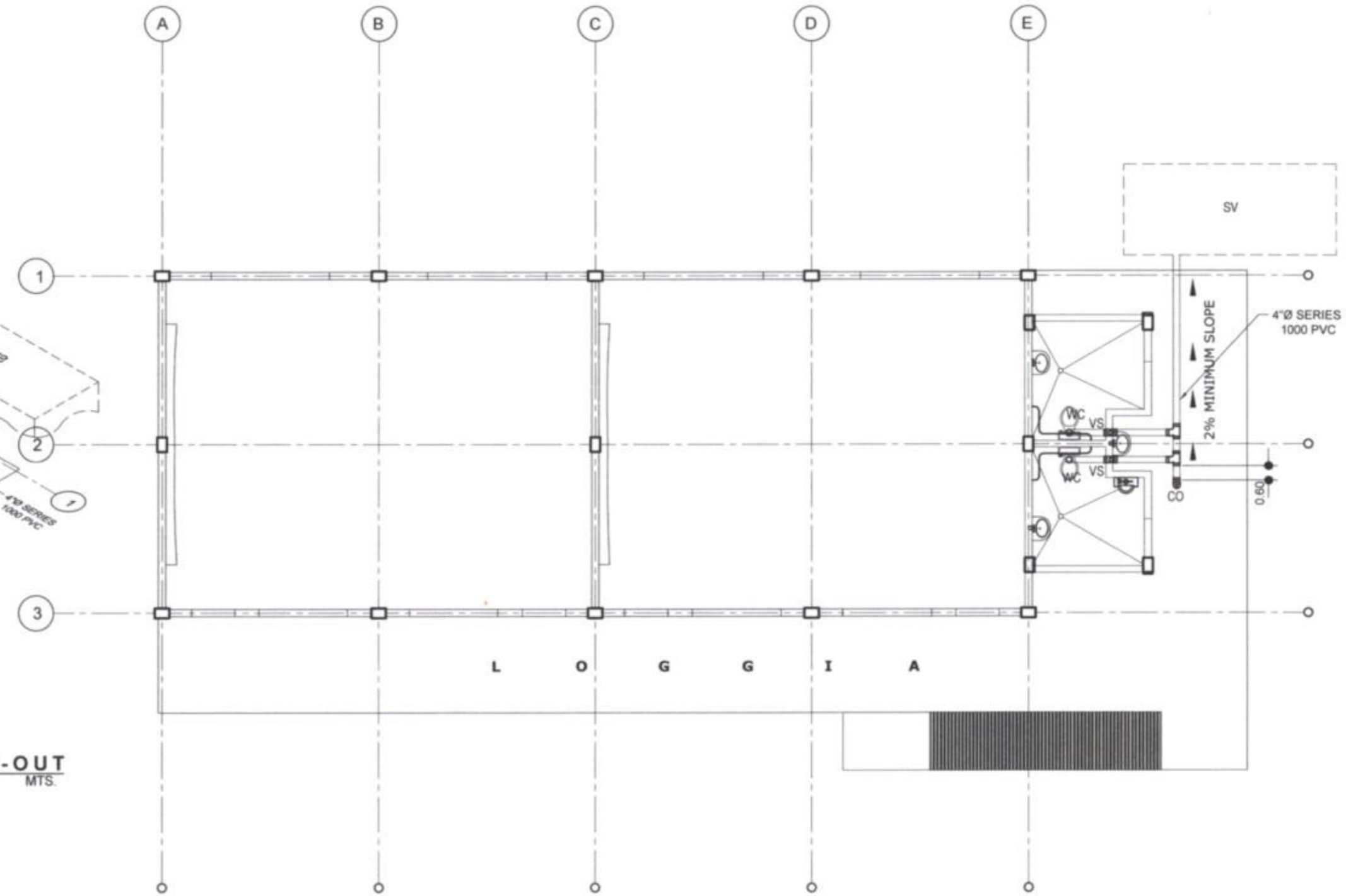

P-3 1 2 **SOIL PIPING LAY OUT'**
SCALE: 1:100 MTS.

REPUBLIC OF THE PHILIPPINES PROVINCE OF SOUTH COTABATO **OFFICE OF THE PROVINCIAL ENGINEER** PLANNING, PROGRAMMING & DESIGNING DIVISION KORONADAL CITY	**PROJECT TITLE & LOCATION:** CONSTRUCTION OF TWO (2) CLASSROOM BUILDING WITH ATTACHED TOILET Ubo Elementary School-Lamferiek Extension, Brgy. Lamfugon, Lake Sebu, South Cotabato	**DRAFTED BY:** JHICOR L. FANUGON, UAP ARCHITECT (J.O.)	**PREPARED BY:** KRISTI ANN S. SERVANEZ ENGINEER I	**CHECKED BY:** GLENDALE B. MARFIL, UAP ARCHITECT III, VERTICAL SECTION HEAD	**SUBMITTED BY:** FREDERICK D. SORIANO,MPA HEAD, Planning, Prog'g & Designing Division	**RECOMMENDING APPROVAL:** MARNILO S. APEROCHO, MPA PROVINCIAL ENGINEER	**APPROVED:** REYNALDO S. TAMAYO, JR. PROVINCIAL GOVERNOR	SHEET NO: P 3 16 22

SPECIFICATIONS:

ALL PLUMBING WORKS AND INSTALLATION SHALL BE DONE IN ACCORDANCE WITH THE NATIONAL PLUMBING CODE OF THE PHIL. AND THE LOCAL PLUMBING CODE REQUIRED.

PROVIDE 3/4" DIA. GATE VALVE FOR WATER SUPPLY FROM WATER SOURCE.

ALL PVC AND G.I. PIPE TO BE USED SHALL BE BRAND NEW AND HIGH QUALITY STANDARD AND APPROVED FOR BOTH LOCATION AND PURPOSES.

ALL CLEAN OUT SHALL BE FLUSHED MOUNTED ON FLOOR EXCEPT AT AREAS SUBJECTED TO TRAFFIC WHICH SHALL BE FLUSHED TO WALL, PROVIDE COVER CAPS.

THE SLOPE OF SEWER LINE SHALL BE 2%%%. FOR DRAIN LINE, IT SHALL BE 1%%%, THE INLET PIPE SHALL BE 2" HIGHER THAN SIPHON PIPE. PROVIDE VENT AS INDICATED.

ALL PLUMBING WORKS AND INSTALLATIONS SHALL BE DONE UNDER THE DIRECT SUPERVISION OF A LICENSED MASTER PLUMBER.

PLUMBING GENERAL NOTES :

PHILIPPINE PLUMBING CODE AND RULES AND REGULATIONS OF THE GOVERNMENT. COORDINATE DRAWING WITH OTHER RELATED DRAWINGS AND SPECIFICATIONS. THE ENGINEER SHALL BE NOTIFIED IMMEDIATELY OF ANY DISCREPANCY FOUND THEREIN. OTHER TRADES SHALL BE SUBJECT TO THE APPROVAL OF THE ARCHITECT AND / OR ENGINEER. ALL SLOPES FOR HORIZONTAL BRANCHES (SEWER) SHALL MAINTAIN 2% AS MINIMUM UNLESS NOTED OTHERWISE. ALL FIXTURES SHALL BE VENTED, UNLESS OTHERWISE INDICATED. ALL INDIVIDUAL BRANCHES TO FIXTURES OR GROUP OF FIXTURES OR EQUIPMENT SHALL BE PROVIDED WITH AIR CHAMBER.

USE 1/2" Ø PVC PIPE " ATLANTA BLUE" OR MOLDEX FOR ALL WATERLINES AFTER THE GATE VALVE.
PVC 2"Ø FOR LAVATORY, SINK, URINAL AND VENT PIPE.
PVC 3"Ø SHOWER FLOOR DRAIN AND DOWNSPOUTS
PVC 4"Ø FOR WATER CLOSET, WASTE WATER LINE AND MAIN SEWER LINE

LEGEND:

W.C.	WATER CLOSET
LAV.	LAVATORY
F.	FAUCET
F.D.	FLOOR DRAIN
C.O.	CLEAN OUT
S.V.	SEPTIC VAULT
R.V.	RELIEF VENT
C.B.	CATCH BASIN
G.V.	GATE VALVE
S.S.	SOIL STACK
C.V.	CHECK VALVE
S.V.	STACK VENT
V.S.	VENT STACK
SHO.	SHOWER

NOTE:

ALL PIPE ROUGHING - IN INSTALLATION SHALL BE CHECKED BEFOREHAND BY THE DESIGNER & PROJECT ENGINEER PRIOR UPON SOLVENT CEMENT FIXED FASTENING & CONCEALING.

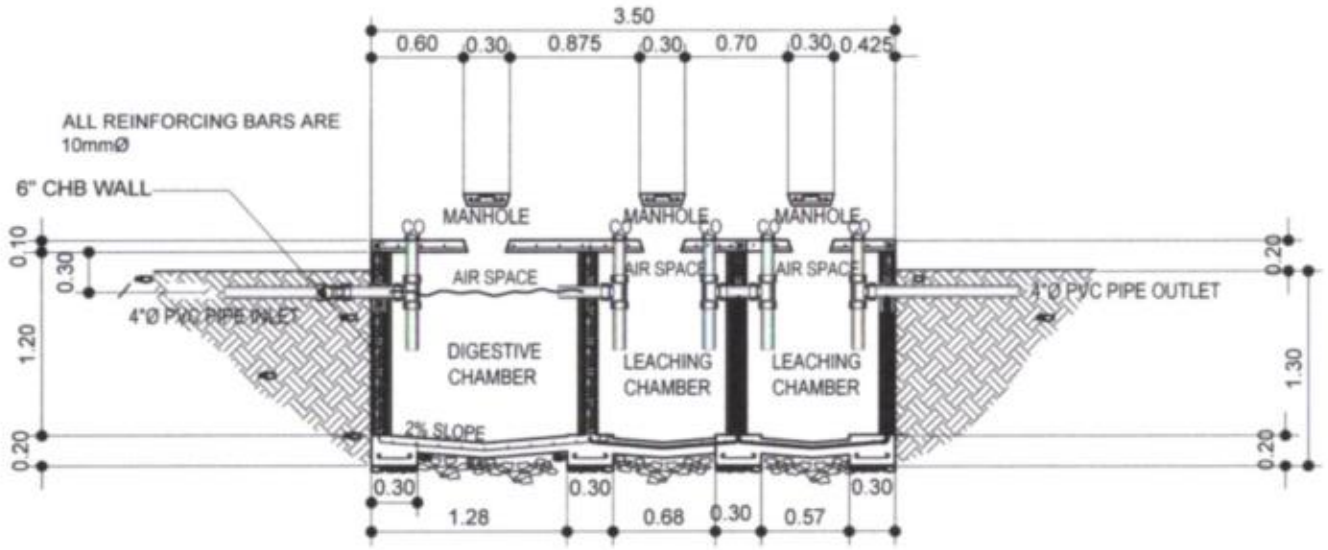

SECTIONAL ELEVATION

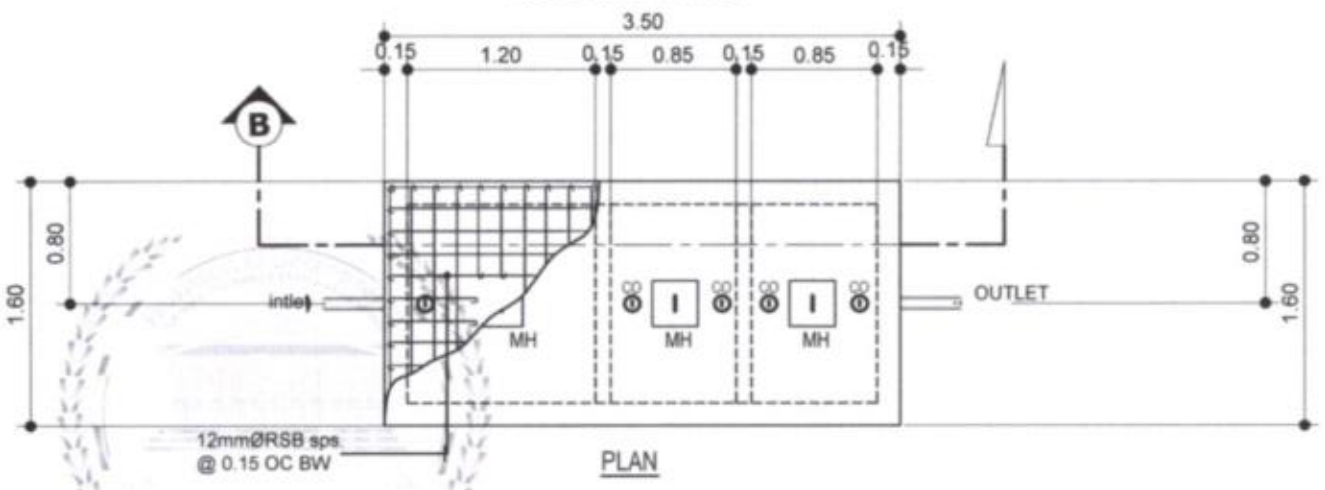

PLAN

P 4 / 1 3 **SEPTIC VAULT DETAIL**
SCALE 1:50 MTS

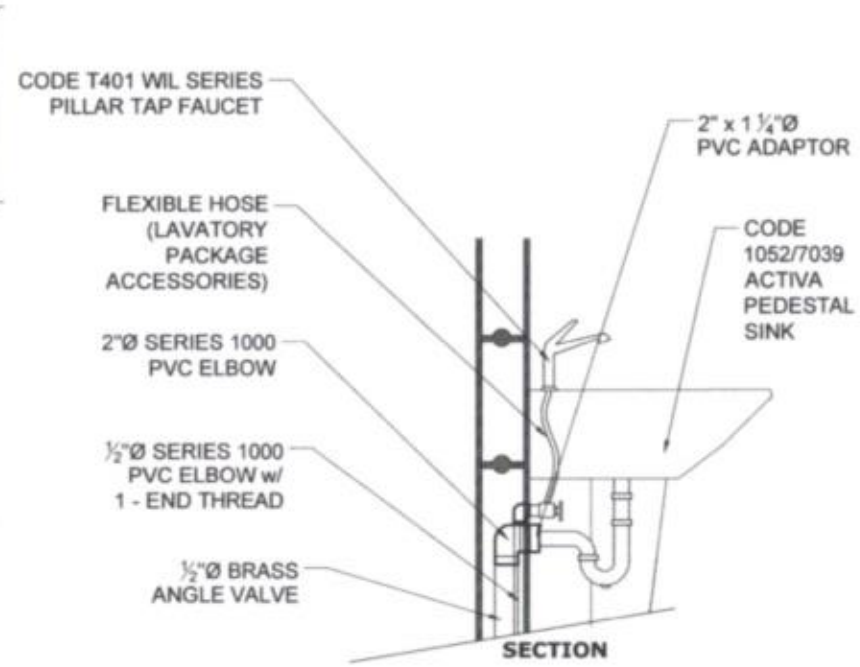

SECTION

P 4 / 2 3 **PEDESTAL LAVATORY DETAIL**
N T S

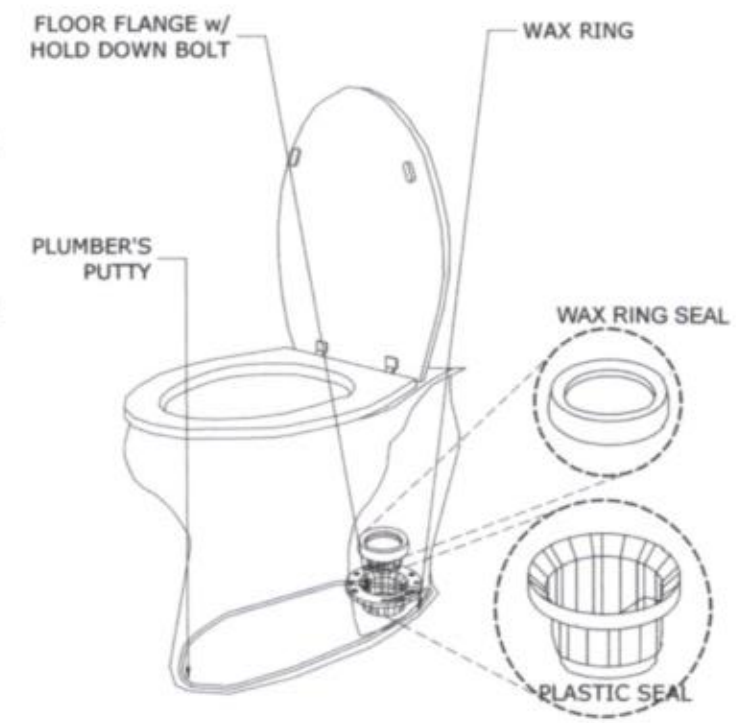

P 4 / 3 3 **WATER CLOSET FLOOR FLANGE DETAIL**
N T S

REPUBLIC OF THE PHILIPPINES PROVINCE OF SOUTH COTABATO OFFICE OF THE PROVINCIAL ENGINEER PLANNING, PROGRAMMING & DESIGNING DIVISION KORONADAL CITY	PROJECT TITLE & LOCATION:	DRAFTED BY:	PREPARED BY:	CHECKED BY:	SUBMITTED BY:	RECOMMENDING APPROVAL:	APPROVED:	SHEET NO:
	CONSTRUCTION OF TWO (2) CLASSROOM BUILDING WITH ATTACHED TOILET Ubo Elementary School-Lamfenek Extension, Brgy. Lamfugon, Lake Sebu, South Cotabato	JHICORI L. FANUGON, UAP ARCHITECT (J.O.)	KRISTY ANN S. SERVANEZ ENGINEER I	GLENDALE B. MARFIL, UAP ARCHITECT III- VERTICAL SECTION HEAD	FREDERICK D. SORIANO,MPA HEAD, Planning, Prog'g & Designing Division	MARNILO S. APEROCHO, MPA PROVINCIAL ENGINEER	REYNALDO S. TAMAYO, JR. PROVINCIAL GOVERNOR	P 4 / 17 22

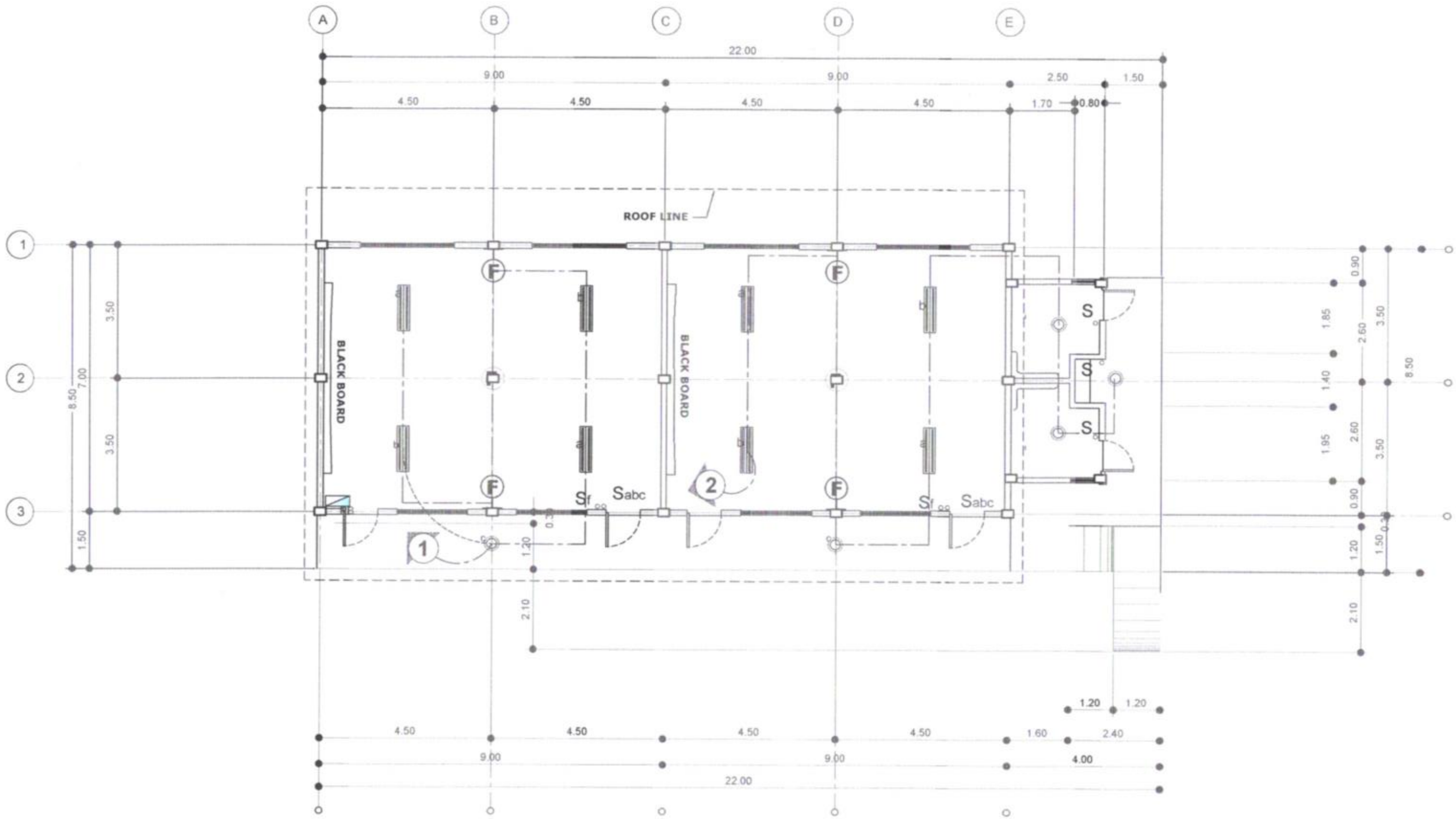

E-1 1 | 1

LIGHTING LAY-OUT PLAN

SCALE: 1:100 MTS

REPUBLIC OF THE PHILIPPINES PROVINCE OF SOUTH COTABATO OFFICE OF THE PROVINCIAL ENGINEER PLANNING, PROGRAMMING & DESIGNING DIVISION KORONADAL CITY	PROJECT TITLE & LOCATION: CONSTRUCTION OF TWO CLASSROOM (7X9m) BLDG. WITH ATTACHED TOILET UNO ELEMENTARY SCHOOL - LAMPENDEK EXTENSION, BRGY. LAMPUSON, LAKE SEBU, CO. OOT.	PREPARED BY: HELEN JEAN T. LINGAS ELEC. ENGINEER (J.O.)	CHECKED BY: EDUARDO S. CAMISURA, JR. ELEC. ENGINEER I	CONFORMED BY: GLENDALE B. MARFIL, UAP ARCHITECT III- Building Section Chief	CONFORMED BY: PRINCIPAL	SUBMITTED BY: FREDERICK P. SORIANO, MPA HEAD, Planning, Prog'g & Designing Division	RECOMMENDING APPROVAL: MARNILO S. APEROCHO PROVINCIAL ENGINEER	APPROVED: REYNALDO S. TAMAYO, JR. PROVINCIAL GOVERNOR	SHEET NO. E 1 1820

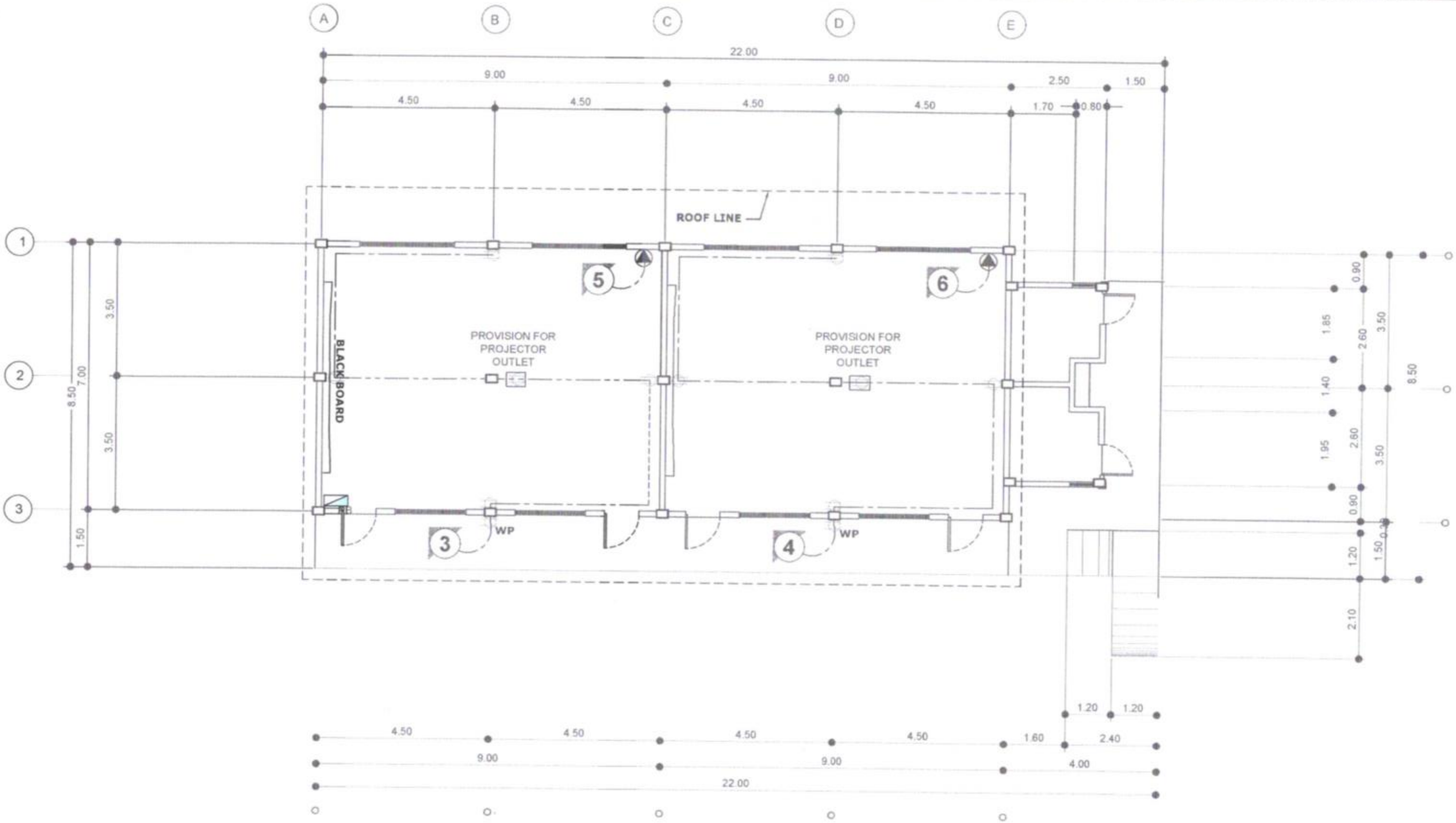

E-2 / 1 1

CONVENIENCE OUTLET LAY-OUT PLAN

SCALE: 1:100 MTS

REPUBLIC OF THE PHILIPPINES PROVINCE OF SOUTH COTABATO OFFICE OF THE PROVINCIAL ENGINEER PLANNING, PROGRAMMING & DESIGNING DIVISION KORONADAL CITY	PROJECT TITLE & LOCATION: CONSTRUCTION OF TWO CLASSROOM (7X9m) BLDG. WITH ATTACHED TOILET ORT ELEMENTARY SCHOOL, LAKE SEBU, SOUTH	PREPARED BY: HELEN JEAN T. LINGAS ELEC. ENGINEER (J.O.)	CHECKED BY: EDUARDO S. CAMISURA, JR. ELEC. ENGINEER I	CONFORMED BY: LEONDALE B. MARFIL, UAP ARCHITECT III - Building Section Chief	CONFORMED BY: PRINCIPAL	SUBMITTED BY: FREDERICK D. SORIANO, MPA HEAD, Planning, Prog'g & Designing Division	RECOMMENDING APPROVAL: MARNILO S. TAPEROCHO PROVINCIAL ENGINEER	APPROVED: REYNALDO S. TAMAYO, JR. PROVINCIAL GOVERNOR	SHEET NO. E 2 19/20

LEGEND

PB — PULL BOX

SB — SQUARE BOX

JB — JUNCTION BOX

UB — UTILITY BOX

POLYVINYL CHLORIDE CONDUIT (PVC) / FLEXIBLE HOSE

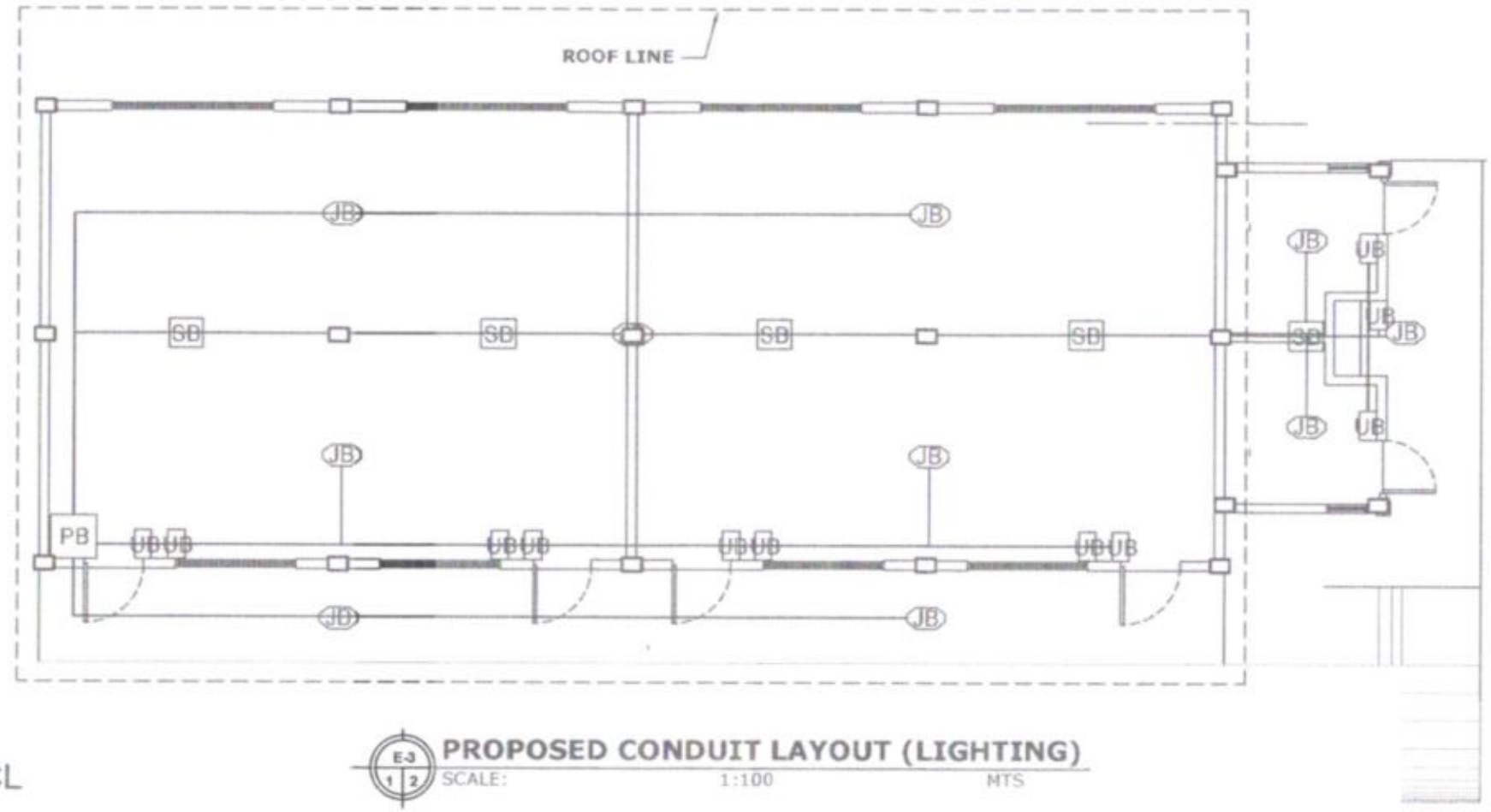

E-3 / 1 2 **PROPOSED CONDUIT LAYOUT (LIGHTING)**
SCALE: 1:100 MTS

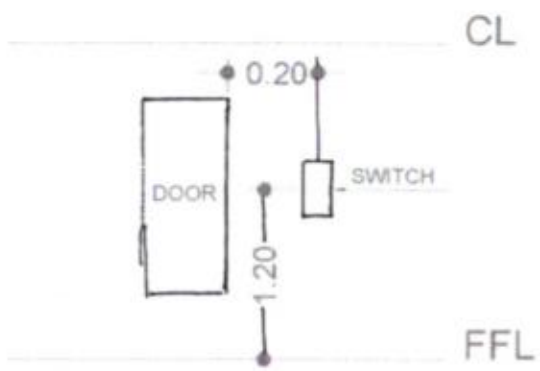

E-3 / 2 2 **FIXTURE LOCATION DETAIL (SWITCHES)**
N T S

REPUBLIC OF THE PHILIPPINES PROVINCE OF SOUTH COTABATO OFFICE OF THE PROVINCIAL ENGINEER PLANNING, PROGRAMMING & DESIGNING DIVISION KORONADAL CITY	PROJECT TITLE & LOCATION: CONSTRUCTION OF TWO CLASSROOM (7X9m) BLDG. WITH ATTACHED TOILET — DIST.: LAKE SEBU, CO.: SPT.	PREPARED BY: HELEN JEAN T. LINGAS, ELEC. ENGINEER (J.O.)	CHECKED BY: EDUARDO S. CAMSURA, JR., ELEC. ENGINEER I	CONFORMED BY: GLENDALE B. MARFIL, UAP, ARCHITECT III - Building Section Chief	CONFORMED BY: PRINCIPAL	SUBMITTED BY: FREDERICK O. SORIANO, MPA, HEAD, Planning, Prog'g & Designing Division	RECOMMENDING APPROVAL: MARNILO S. APEROCHO, PROVINCIAL ENGINEER	APPROVED: REYNALDO S. TAMAYO, JR., PROVINCIAL GOVERNOR	SHEET NO. E 3 2020

LEGEND

PB — PULL BOX

SB — SQUARE BOX

JB — JUNCTION BOX

UB — UTILITY BOX

POLYVINYL CHLORIDE CONDUIT (PVC) / FLEXIBLE HOSE

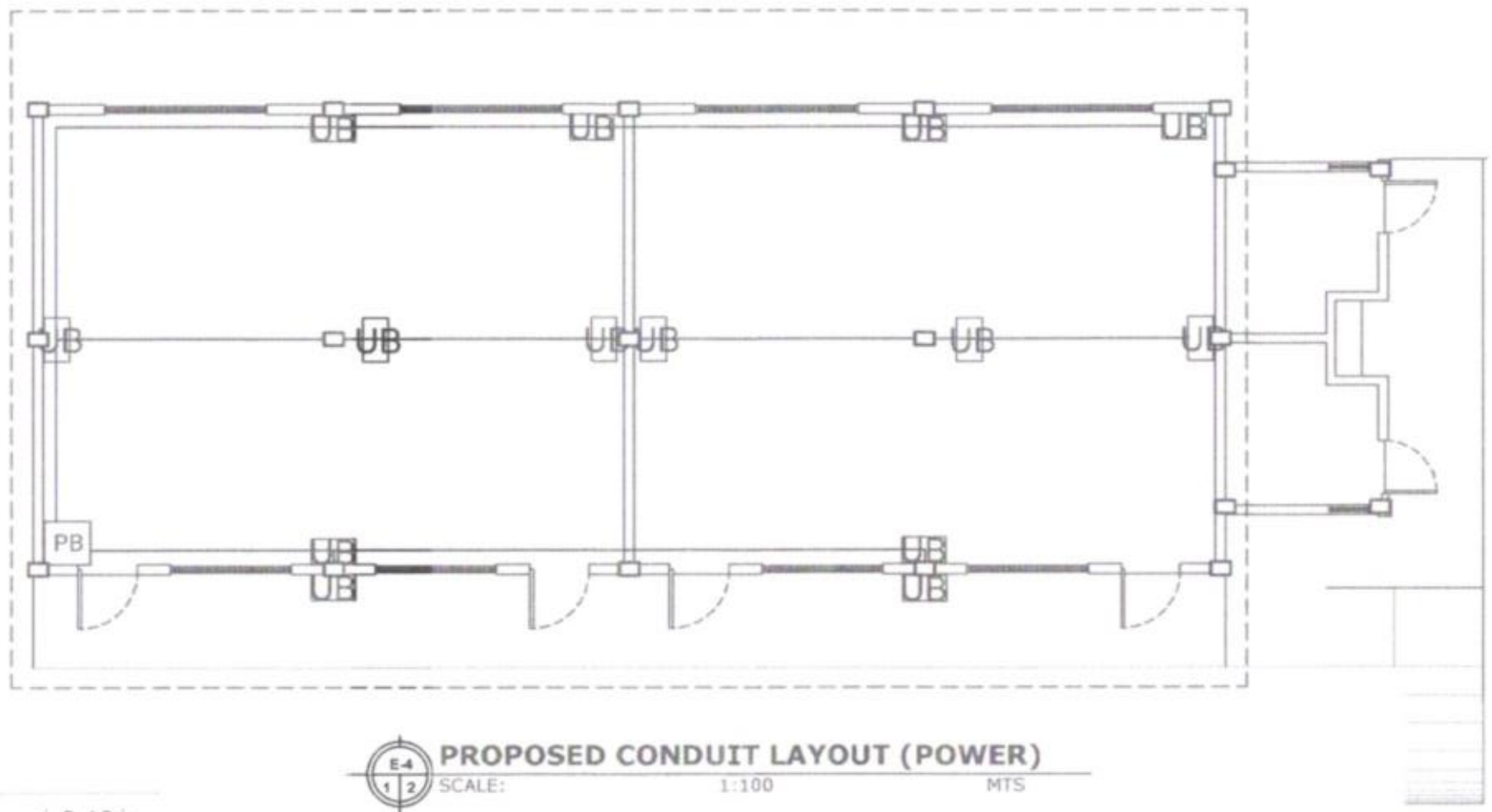

E-4 / 1 2 **PROPOSED CONDUIT LAYOUT (POWER)**

SCALE: 1:100 MTS

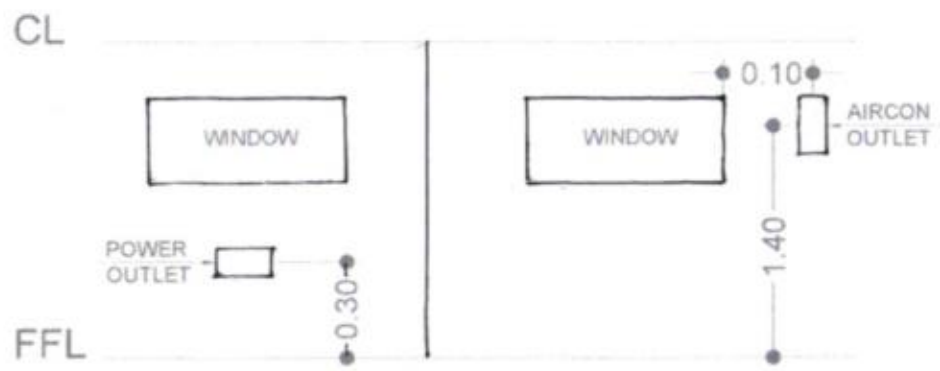

E-4 / 2 2 **FIXTURE LOCATION DETAIL (OUTLETS)**

N T S

REPUBLIC OF THE PHILIPPINES PROVINCE OF SOUTH COTABATO OFFICE OF THE PROVINCIAL ENGINEER PLANNING, PROGRAMMING & DESIGNING DIVISION KORONADAL CITY	PROJECT TITLE & LOCATION: CONSTRUCTION OF TWO CLASSROOM (7X9m) BLDG. WITH ATTACHED TOILET LAKE SEBU, SO. GOT.	PREPARED BY: HELEN JEAN T. LINGAS, ELEC. ENGINEER (J.O.)	CHECKED BY: EDUARDO S. CAMSURA, JR., ELEC. ENGINEER I	CONFORMED BY: GLENDALE B. MARFIL, UAP, ARCHITECT II - Building Section Chief	CONFORMED BY: PRINCIPAL	SUBMITTED BY: FREDERICK D. SORIANO, MPA, HEAD, Planning, Prog'g & Designing Division	RECOMMENDING APPROVAL: MARNILO S. APEROCHO, PROVINCIAL ENGINEER	APPROVED: REYNALDO S. TAMAYO, JR., PROVINCIAL GOVERNOR	SHEET NO. E 4 / 21 20

NOTES & SPECIFICATIONS

1. ALL ELECTRICAL WORKS SHALL COMPLY IN ACCORDANCE WITH THESE PLANS AND SPECIFICATIONS. THE APPLICABLE PROVISIONS OF THE LATEST EDITION OF THE PHILIPPINE ELECTRICAL CODE(PEC). THE RULES AND REGULATION OF THE LOCAL ENFORCING AUTHORITY AND THE REQUIREMENTS OF THE LOCAL POWER COMPANY THE ELECTRICAL WORKS SHALL BE UNDER IMMEDIATE SUPERVISION OF DULY REGISTERED ELECTRICAL ENGINEER.
2. THE ELECTRICAL SERVICE POWER IS 1-PHASE, 2-WIRE, 230V AC, 60Hz.
3. WIRING METHOD SHALL BE AS FOLLOWS:
   a. FEEDERS AND RISER
   b. LIGHTING, POWER RECEPTACLE
   -POLYVINYL CHLORIDE CONDUIT
   BRANCH CKT. & AUXILIARY
   SCH. 40. SERIES 1000
4. ALL WIRES SHALL BE COPPER AND THERMOPLASTIC INSULATED TYPE "THW" UNLESS OTHERWISE INDICATED N THE PLAN. THE MINIMUM SIZE OF THE WIRE FOR POWER AND LIGHTING CIRCUIT HOMERUN SHALL BE 2.0mm AND INSULATED FOR 600 VOLTS. SMALLEST RACEWAY SHALL BE 20mm TRADE NOMINAL SIZE.
5. ALL OUTLET BOXES SHALL BE POLYVINYL CHLORIDE CONDUIT.
6. ALL MATERIAL TO BE USED SHALL BE BRAND NEW AND OF APPROVED TYPE IN PARTICULAR SPECIFIED LOCATION AND AS PER PURPOSE OF USAGE.
7. MOUNTING HEIGHT OF WIRING DEVICES SHALL BE AS FOLLOWS:
   a. LIGHT SWITCH - 1.20M ABOVE FINISH FLOOR.
   b. CONVENIENCE OUTLET -0.30M ABOVE FINISH FLOOR.
   c. PANELBOARD -1.80M ABOVE FINISH FLOOR.
8. ALL ELECTRICAL ROUGHING INS/CONDUITS MUST BE CHECKED BY THE DESIGNER AND THE PROJECT ENGINEER PRIOR TO PULLING OF WIRES.

LEGEND

- LED RECESSED DOWNLIGHT ULTRA-THIN WIDE BEAM ANGLE S:7.5° LDL225708DL, 8W MINIMUM 520Lm
- T8 ALUMINUM LOUVER WITH EXTREME ELECTRONIC BALLAST WITH TUBE 7"X24" (ST), 1X18W
- F — CEILING FAN
- F — WALL FAN
- S/Sₙ — ONE GANG DEVICE SWITCH
- S₂/Sₙₖ — TWO GANG DEVICE SWITCH
- S₃/Sₙₖ — THREE GANG DEVICE SWITCH
- Sf — FAN CONTROL SWITCH
- PANELBOARD
- 2-GANG CONVENIENCE FLOOR OUTLET
- WP — WEATHERPROOF DUPLEX CONVENIENCE OUTLET
- DUPLEX CONVENIENCE OUTLET, GROUNDING TYPE 10 AMPS, 220 VOLT WITH MODERN COVER
- AIRCON OUTLET
- CIRCUIT BREAKER, RATING IS INDICATED

LOAD SCHEDULE

CIRCUIT NO.	DESCRIPTION	QTY	VA	V	A	PROTECTION	SIZE OF WIRE	CONDUIT
1	LIGHTING OUTLET	8	800	230	3.48	15 AT	2.0mm² THHN	20 mm Ø uPVC
2	LIGHTING OUTLET	11	1100	230	4.78	15 AT	2.0mm² THHN	20 mm Ø uPVC
3	POWER OUTLET	6	1080	230	4.70	20 AT	3.5mm² THHN	20 mm Ø uPVC
4	POWER OUTLET	6	1080	230	4.70	20 AT	3.5mm² THHN	20 mm Ø uPVC
5	AIRCON OUTLET	1	1380	230	12.0	30 AT	5.5mm² THHN	20 mm Ø uPVC
6	AIRCON OUTLET	1	1380	230	12.0	30 AT	5.5mm² THHN	20 mm Ø uPVC
7	SPARE							
8	SPARE							

It = 41.66 A FEEDER: 2-14mm² THHN IN 32mmØ RSC PIPE MAIN CB: 60AMP CB

ONE LINE DIAGRAM

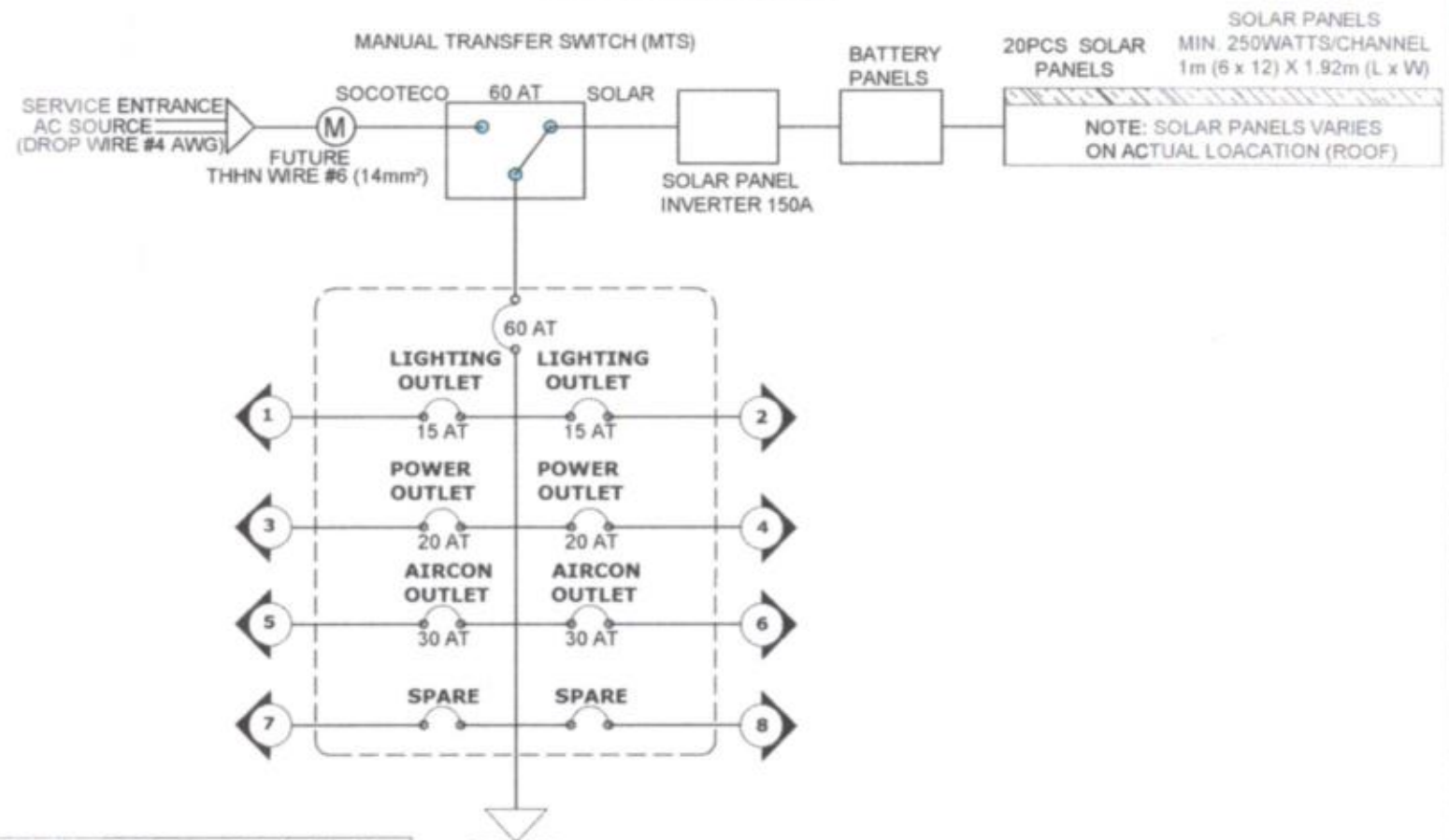

VICINITY MAP

REPUBLIC OF THE PHILIPPINES PROVINCE OF SOUTH COTABATO OFFICE OF THE PROVINCIAL ENGINEER PLANNING, PROGRAMMING & DESIGNING DIVISION KORONADAL CITY	PROJECT TITLE & LOCATION: CONSTRUCTION OF TWO CLASSROOM (7X9m) BLDG. WITH ATTACHED TOILET DISI ELEMENTARY SCHOOL - LAMFERIER EXTENSION, BRGY. LAMFERIER, LAKE SEBU, SO. COT.	PREPARED BY: HELEN JEAN T. LINGAS ELEC. ENGINEER (J.O.)	CHECKED BY: EDUARDO S. CAMISURA, JR. ELEC. ENGINEER I	CONFORMED BY: GLENDALE B. MARFIL, UAP ARCHITECT III- Building Section Chief	CONFORMED BY: PRINCIPAL	SUBMITTED BY: FREDERICK D. SORIANO, MPA HEAD, Planning, Prog'g & Designing Division	RECOMMENDING APPROVAL: MARNILO S. APEROCHO PROVINCIAL ENGINEER	APPROVED: REYNALDO S. TAMAYO, JR. PROVINCIAL GOVERNOR	SHEET NO. E 5 / 2220